US Army Corps of Engineers

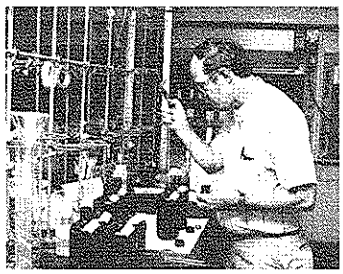

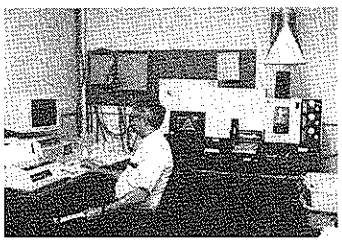

WATER OPERATIONS TECHNICAL SUPPORT PROGRAM

TECHNICAL REPORT W-91-1

PROCEEDINGS OF THE SEVENTH CORPS CHEMISTS MEETING

22-24 MAY 1990

Hosted by North Pacific Division Laboratory

compiled by

Ann B. Strong

Environmental Laboratory

DEPARTMENT OF THE ARMY
Waterways Experiment Station, Corps of Engineers
3909 Halls Ferry Road, Vicksburg, Mississippi 39180-6199

July 1991

Final Report

Approved for Public Release; Distribution Unlimited

Prepared for DEPARTMENT OF THE ARMY
US Army Corps of Engineers
Washington, DC 20314-1000

Destroy this report when no longer needed. Do not return it to the originator.

The findings in this report are not to be construed as an official Department of the Army position unless so designated by other authorized documents.

The contents of this report are not to be used for advertising, publication, or promotional purposes. Citation of trade names does not constitute an official endorsement or approval of the use of such commercial products.

REPORT DOCUMENTATION PAGE

Form Approved
OMB No. 0704-0188

Public reporting burden for this collection of information is estimated to average 1 hour per response, including the time for reviewing instructions, searching existing data sources, gathering and maintaining the data needed, and completing and reviewing the collection of information. Send comments regarding this burden estimate or any other aspect of this collection of information, including suggestions for reducing this burden, to Washington Headquarters Services, Directorate for Information Operations and Reports, 1215 Jefferson Davis Highway, Suite 1204, Arlington, VA 22202-4302, and to the Office of Management and Budget, Paperwork Reduction Project (0704-0188), Washington, DC 20503.

1. AGENCY USE ONLY *(Leave blank)*

2. REPORT DATE
July 1991

3. REPORT TYPE AND DATES COVERED
Final report

4. TITLE AND SUBTITLE
Proceedings of the Seventh Corps Chemists Meeting, 22-24 May 1990

5. FUNDING NUMBERS
96X3123

6. AUTHOR(S)
Ann B. Strong

7. PERFORMING ORGANIZATION NAME(S) AND ADDRESS(ES)
USAE Waterways Experiment Station, Environmental Laboratory
3909 Halls Ferry Road, Vicksburg, MS 39180-6199

8. PERFORMING ORGANIZATION REPORT NUMBER
Technical Report W-91-1

9. SPONSORING/MONITORING AGENCY NAME(S) AND ADDRESS(ES)
US Army Corps of Engineers, Washington, DC 20314-1000

10. SPONSORING/MONITORING AGENCY REPORT NUMBER

11. SUPPLEMENTARY NOTES
Available from National Technical Information Service, 5285 Port Royal Road, Springfield, VA 22161

12a. DISTRIBUTION/AVAILABILITY STATEMENT
Approved for public release; distribution unlimited

12b. DISTRIBUTION CODE

13. ABSTRACT *(Maximum 200 words)*

The seventh Corps Chemists Meeting was held in Portland, OR, on 22-24 May 1990. Attendees included chemists and other interested personnel from the various Corps Divisions, Districts, research labs, and Headquarters offices. Presentations were given on field-laboratory interactions, analytical procedures for metals, explosives, and PCBs, GC/MS methodology and related QA/QC, ion chromatography, LIMS systems, QA/QC data comparisons, data quality objectives, laboratories as generators of hazardous wastes, environmental laws and regulations, the FUDS and UST programs, and air sampling methods. Informal discussion sessions were held on problems facing Corps chemists and the future thrust of Corps programs as they affect the chemists.

14. SUBJECT TERMS
See reverse

15. NUMBER OF PAGES
157

16. PRICE CODE

17. SECURITY CLASSIFICATION OF REPORT
UNCLASSIFIED

18. SECURITY CLASSIFICATION OF THIS PAGE
UNCLASSIFIED

19. SECURITY CLASSIFICATION OF ABSTRACT

20. LIMITATION OF ABSTRACT

14. (Concluded).

Air sampling
Data quality objectives
Explosives
Formerly used defense sites (FUDS)
Gas chromatography/mass spectrometry (GC/MS)
Hazardous wastes
Ion chromatography
Laboratory Information Management Systems (LIMS)
Metals
Polychlorinated biphenyls (PCBs)
Quality assurance
Underground storage tanks (UST)

Preface

The seventh annual Corps Chemists Meeting was sponsored by the Water Operations Technical Support (WOTS) Program, which is managed within the Environmental Resources Research and Assistance Program (ERRAP) at the US Army Engineer Waterways Experiment Station (WES). Mr. J. Lewis Decell is Program Manager, ERRAP, WES, and Dr. A. J. Anderson is Assistant Manager. Technical Monitors at Headquarters, US Army Corps of Engineers (HQUSACE) are Messrs. David P. Buelow and James Gottesman and Dr. John Bushman. Funding was provided under Department of the Army Appropriation 96X3123 (Operations and Maintenance). The meeting was hosted by the North Pacific Division Laboratory, Mr. James A. Paxton, Director, and was held at the Portland District Offices.

Proceedings editor and compiler was Ms. Ann B. Strong, Chief of the Analytical Laboratory Group (ALG), Environmental Laboratory (EL), WES, who also provided overall coordination and moderated the meeting.

Because of the increasing importance of chemists and the work they perform to the Corps mission, this compilation of the Proceedings of the Seventh Annual Meeting has been greatly expanded and will provide a significant contribution to the engineering and scientific communities.

The meeting and the compilation of the Proceedings were conducted under the general supervision of Dr. Raymond L. Montgomery, Chief, Environmental Engineering Division (EED) and Dr. John Harrison, Chief, EL. The report was edited by Ms. Janean C. Shirley of the Information Technology Laboratory.

During the preparation of this report, Colonel Larry B. Fulton, EN, was the Commander and Director of WES, and Dr. Robert W. Whalin was the Technical Director.

This report should be cited as follows:

> Strong, Ann B. 1991. "Proceedings of the Seventh Corps Chemists Meeting, 22-24 May 1990," Technical Report W-91-1, US Army Engineer Waterways Experiment Station, Vicksburg, MS.

Contents

	Page
Preface	i
Attendees	iii
Agenda	vi
Conversion Factors, Non-SI to SI (Metric) Units of Measurement	viii
Picture of Attendees	ix
Opening Remarks	1
Program to Coordinate Field-Laboratory Interactions and Other Water Quality Topics	3
QA/QC Data Comparisons—Agreement or Disagreement	12
Problems Facing Corps Labs	24
Analysis of Metals in the Environment, Current Status of ICP Procedures	27
Corps Division Laboratories as Generators of Hazardous Wastes	32
Interlaboratory Testing Program	39
Laboratory Fraud	46
GC/MS—A Review	50
Quality Assurance/Quality Control for GC/MS Analyses	66
Dioxin in Sediments, So What?	73
Development of a Simplified Field Test for TNT and RDX in Soil	79
Discussion Session	86
Laboratory Automation and LIMS Systems	90
Discussion Session	103
Environmental Laws and Regulations—A Review	106
On-Site PCB Analysis at Kodiak, Alaska, March 1981	110
UST Sampling, Analysis, and Site Regulations	111
Converging Chemical Quality Management Procedures During Multi-Agency Federal Facility Agreements	117
Data Quality Objectives	120
FUDS Update	130
Anion Analysis by Ion Chromatography	135
The USEPA Compendium on Air Sampling Methods	138

Attendees

John Adams
Missouri River Division
CEMRD-ED-GC
PO Box 103
Downtown Station
Omaha, NE 68101
(402/221-7493)

Jim Baliff
Directorate of Military Programs
CEMP-RT
Washington, DC
(202/272-8880)

Duane Bankohor
North Pacific Division
CENPD-ED-G
Box 2870
Portland, OR 97208
(503/326-3368)

Larry Becker
Kansas City District
CEMRK-ED-GE
700 Federal Building
Kansas City, MO 64106
(816/426-7882)

Pam Bedore
Detroit District
CENCE-CO-OO
PO Box 1027
Detroit, MI 48231
(313/226-2384)

Tom Billings
South Atlantic Division Laboratory
CESAD-EN-GL
611 South Cobb Drive
Marietta, GA 30060
(404/421-5271)

Emile Boulos
Directorate of Military Programs
CEMP
Washington, DC 20314
(202/272-8688)

Jim Cheney
Missouri River Division
CEMRD-ED-GC
PO Box 103
Downtown Station
Omaha, NE 68101
(402/221-7413)

Kevin Coats
Missouri River Division
CEMRD-ED-GC
PO Box 103
Downtown Station
Omaha, NE 68101
(402/221-7416)

Carolyn Comeau
Chicago District
CENCC-ED-HE
219 South Dearborn St.
Chicago, IL 60604
(312/353-6518)

Marcia Davies
Missouri River Division
CEMRD-ED-GC
PO Box 103
Downtown Station
Omaha, NE 68101
(402/221-7324)

Robert Flanagan
North Pacific Division
CENPD-EN
P.O. Box 1870
Portland, OR 97208
(503/326-3871)

Jane Gardner-Clayson
Buffalo District
CENCB-EP-HQ
1776 Niagara St.
Buffalo, NY 14207
(716/879-4268)

Ty Gouda
Ohio River Division Laboratory
CEORD-ED-GL
5851 Mariemont Avenue
Mariemont, OH 45227
(513/527-8203)

Bruce Heitke
Directorate of Military Programs
CEMP-RF
Washington, DC 20314
(202/272-8882)

Jeremy Hickerson
North Pacific Division Laboratory
CENPD-EN-GL
1491 Graham Avenue
Troutdale, OR 97060
(503/665-4166)

Lance Hines
Omaha District
CEMRO-ED-EG
215 North 17th Street
Omaha, NE 68102
(402/221-7690)

Cathy Hutchins
Southwestern Division Laboratory
CESWD-ED-GL
4815 Cass Street
Dallas, TX 75242
(214/905-9130)

Ajmal Ilias
North Pacific Division Laboratory
CENPD-EN-GL
1491 Graham Avenue
Troutdate, OR 97060
(503/665-4166)

Tom Jenkins
Cold Regions Research and Engineering Laboratory
CRREL
72 Lyme Road
Hanover, MA 03755
(603/646-4385)

Richard Karn
Waterways Experiment Station
CEWES-EE-A
3909 Halls Ferry Rd
Vicksburg, MS 39180
(601/634-3862)

Mark Koenig
New England Division Laboratory
CENED-ED-GL-E
Barre Falls Dam
RFD 1
Hubbardston, MA 01452
(508/928-4711)

Dave Koran
Ohio River Division
CEORD-ED-WQ
PO Box 1159
Cincinnati, OH 45201
(513/684-3029)

T. C. Linn
Construction Engineering Research Laboratory
CECER
PO Box 4005
Champaign, IL 61824
(217/352-6511)

George Medina
South Pacific Division Laboratory
CESPD-ED-GL
PO Box 37
Sausalito, CA 94966
(415/556-1245)

Karen Myers
Waterways Experiment Station
CEWES-EE-A
3909 Halls Ferry Rd
Vicksburg, MS 39180
(601/634-3652)

Jim Nowland
South Atlantic Division Laboratory
CESAD-EN-GL
611 South Cobb Dr.
Marietta, GA 30060
(404/421-5270)

Dave Paulson
North Pacific Division Laboratory
CENPD-ED-GL
1491 Graham Avenue
Troutdale, OR 97060
(503/665-4166)

Jim Paxton
North Pacific Division Laboratory
CENPD-ED-GL
1491 Graham Avenue
Troutdale, OR 97060
(503/665-4166)

Bill Saner
New England Division Laboratory
CENED-ED-GL-E
Barre Falls Dam
RFD 1
Hubbardston, MA 01452
(508/928-4238)

Don Schlack
Pacific Ocean Division
CEPOD-ED-Mi
Ft. Shafter, HI 96858
(808/262-0072)

Steve Servay
New Orleans District
CELMN-ED-HH
PO Box 60267
New Orleans, LA 70160
(504/862-1816)

Joan Shafer
Seattle District
CENPS-EN-GT-HW
PO Box C-3755
Seattle, WA 98124
(206/764-6744)

Ted Shannon
Missouri River Division Laboratory
CEMRD-ED-GL
420 South 18th Street
Omaha, NE 68102
(402/444-4318)

Scott R. Sloane
North Pacific Division Laboratory
CENPD-EN-G
1491 Graham Avenue
Troutdale, OR 97060
(503/665-4166)

Frank Snitz
Detroit District
CENCE-PD-EA
PO Box 1027
Detroit, MI 48231
(313/226-6748)

Joe Solsky
Missouri River Division Laboratory
CEMRD-ED-GL
420 South 18th Street
Omaha, NE 68102
(402/444-4304)

Ann Strong
Waterways Experiment Station
CEWES-EE-A
3909 Halls Ferry Rd
Vicksburg, MS 39180
(601/634-2726)

Marty Stutz
US Toxic and Hazardous Materials Agency
CETHA-TS-C
Aberdeen Proving Ground
Aberdeen, MD 21010
(301/671-3348)

Joe Svirbely
Ohio River Division Laboratory
ORD-ED-GL
5851 Mariemont Avenue
Mariemont, OH 45227
(513/527-8215)

Pamela Swann
North Pacific Division Laboratory
CENPD-EN-GL
1491 Graham Avenue
Troutdale, OR 97060
(503/665-4166)

Jim Troutdale
North Pacific Division Laboratory
CENPD-ED-GL
1491 Graham Avenue
Troutdale, OR 97060
(503/665-4166)

Joan Van Den Akker
North Pacific Division Laboratory
CENPD-ED-GL
1491 Graham Avenue
Troutdale, OR 97060
(503/665-4166)

Doug Webb
Nashville District
CEORN-ED-E
PO Box 1070
Nashville, TN 37202
(615/736-5675)

Agenda

Corps Chemists Meeting
22-24 May 1990

Tuesday, 22 May

0800	Registration	
0830	Introductory remarks	Jim Paxton, NPD
0840	Welcome	Robert Flanagan C/Engineering Div/NPD
0855	General Announcements	Ann Strong, WES
0910	Program to Coordinate Field-Laboratory Interactions	Dave Koran, ORD
0950	QA/QC Data Comparisons - Agreement or Disagreement	Joe Solsky, MRD
1030	Break	
1045	Problems Facing Corps Labs (Instrumentation, data management, personnel, etc.)	Audience
1130	Lunch	
1230	Analysis of Metals in the Environment Current Status of ICP procedures	Ted Shannon, MRD
1315	Corps Divisions as Generators of Hazardous Wastes	Kevin Coats, MRD
1400	Review of Interlaboratory Testing Program	Ann Strong, WES
1430	Break	
1445	Laboratory Fraud	Marty Stutz, USATHAMA
1515	GC/MS, A mini-course on applications, data management and quality control	Richard Karn and Karen Myers, WES
1700	Adjourn	

Wednesday, 23 May 1990

0800	Dioxin in Sediments, So what?	Frank Snitz, Detroit
0845	Development of a Simplified Field Test for TNT and RDX in Soil	Tom Jenkins, CRREL
0930	Laboratory Automation and LIMS Systems	Joe Solsky, MRD
1015	Break	
1030	Environmental Laws and Regulations- A Review	Ann Strong, WES
1115	Discussion Session	
1130	Lunch	
1230	UST Sampling, Analysis and Site Regulations	John Adams, MRD
1300	Onsite PCB Analyses	Bill Saner, NED
1330	Converging of Chemical Quality Management Procedures During Multiagency Federal Facility Agreements	Lance Hines, Omaha
1400	Data Quality Objectives	Marcia Davies, MRD
1445	Break	

1500	FUDS Update	Bruce Heitke, OCE
1530	Anion Analysis by Ion Chromatography	Mark Koenig, NED
1600	The USEPA Compendium on Air Sampling Methods	Jim Cheney, MRD
1630	Summary	Ann Strong, WES

Thursday, 24 April 1990

0800	Field Trip Up the Columbia River (return in time to catch 1:00 P.M. flights)	NPD

Conversion Factors, Non-SI to SI (Metric) Units Of Measurement

Non-SI units of measurement used in this report can be converted to SI (metric) units as follows:

Multiply	By	To Obtain
Fahrenheit degrees	5/9	Celsius degrees or kelvins*
feet	0.3048	metres
gallons (US liquid)	3.785412	cubic decimetres
inches	2.54	centimetres
miles (US statute)	1.609347	kilometres
ounces (US fluid)	0.02957353	cubic decimetres
yards	0.9144	metres

* To obtain Celsius (C) temperature readings from Fahrenheit (F) readings, use the following formula: $C = (5/9)(F - 32)$. To obtain kelvin (K) readings, use $K = (5/9)(F - 32) + 273.15$.

Attendees — Corps Chemists Meeting — 1990

Row 1. Bruce Heitke, OCE; John Adams, MRD; Scott Sloan, NPD Lab; Dan Schlack, POD; George Medina, SPD Lab.
Row 2. Joe Svirbely, ORD Lab; Joan Shafer, Seattle District; Pam Bedore, Detroit District; Ty Gouda, ORD Lab; Kevin Coats, MRD; Jeremy Hickerson, NPD Lab; Cathy Hutchins, SWD Lab; Ajmal Ilias, NPD Lab; Jane Gardner-Clayson, Buffalo District; Karen Myers, WES.
Row 3. Ann Strong, WES; Ted Shannon, MRD Lab; Tom Billings, SAD Lab; Marcia Davies, MRD; Doug Webb, Nashville District; Joan Van den Akker, NPD Lab; Carolyn Commeau, Chicago District, T. C. Lin, CERL; Richard Karn, WES; Bill Saner, NED Lab; Pamela Swann, NPD; Jim Nowland, SAD Lab; Emile Boulos, OCE.
Row 4. Larry Becker, Kansas City District; Dave Koran, ORD; Steve Servay, New Orleans District; Frank Snitz, Detroit District; Mark Koenig, NED; Jim Baliff, OCE; Joe Solsky, MRD Lab; Tom Jenkins, CRREL; Marty Stutz, USATHAMA; Jim Cheney, MRD; Lance Hines, Omaha District.

PROCEEDINGS OF THE SEVENTH CORPS CHEMISTS MEETING
22-24 May 1990

Opening Remarks

Mr. Robert Flanagan, Chief, Engineering Division
North Pacific Division

I'd like to say a couple of things this morning. The first one is to just say welcome to the North Pacific Division, on behalf of General Pat Stevens, who was unable to be here this morning. He's in Port Ludlow in the Seattle area at an officer's call meeting. On his behalf and for myself personally, welcome to the North Pacific Division. Let us know if there's anything that we can do or arrange to have done for you while you're here. I'd like to point out to you concerning the Division, there are several things here that are quite interesting, depending on your particular interest, besides the things that chemists might ordinarily do. We've probably got more high head dams in this area than you'll find anywhere else in the Corps. We've got 13 in the Willamette Basin and we've got the Columbia system. As a direct result of the Columbia system, the North Pacific Division produces about two-thirds of the hydropower in the Corps and about two-thirds of the hydropower for this region. A very significant fact associated with that is that we have anadromous fish. I guess that other people have anadromous fish also, but if you want an education in fish, you can find out all you need to know or all that you ever wanted to know very quickly just by asking a few questions.

We've got a growing hazardous and toxic waste (HTW) program and I know that you are directly interested in that and we've also got a little exercise going with the Department of Energy (DOE) concerning Hanford cleanup. That's developing now so not too many details are available. That's one of the growing things and going things at the analytical lab that will be of interest to the total program. I would invite you to watch the politics associated with Hanford and would share with you a bit of personal theory about how we might or might not get involved in a large way with the Hanford area. The first view, which some might consider a bit negative, is that I personally don't think that we'll ever get involved in a large mission with DOE by the invitation voluntarily of DOE. I don't think DOE wants us in that business. I think they'd just as soon manage their own. I also think the A-E community is not very anxious to have us in the business of managing cleanup. I think, though, that we have some Congressmen around, like Congressman Foley in this particular case, in Washington who are very interested in having the Corps involved in Hanford in a big way. I wouldn't be too surprised to see him generate some legislation that might put us in the business in a larger way than we have been with other agencies. Anyway, I think that is a situation that you will be interested in watching. We've got a large contract under way at Bonneville and I think that may be a point of interest on your tour.

I'm not really capable of serving as a tour guide for Portland itself, and I know that it's raining, but if you do have a little time, look around. The city is nice, the "City of Roses." You can go about an hour and a half to the east and you run into Mount Hood

and about an hour and a half to the west and you hit the Pacific Ocean. Portland is a city of about half a million people and about a million and a half in the metropolitan area.

Now for thoughts on this session, I guess that my initial thoughts are those that would be most common. It certainly is an opportunity for sharing between professionals, what your concerns are and what your thoughts are. It's an opportunity to share between the labs and the headquarters - keep that communication bridge open because it's an opportunity to do that when they're looking at a growth in the program. And that's always an exciting time. Jim (Paxton) gave me some numbers and the numbers indicated that last year we had 20 chemists in the seven Division labs and this year we have 40 chemists. That's quite a growth and I think that's indicative of the program growth. This, I believe, is your seventh meeting. The first was in '79 and it's been an annual affair ever since after about a 5-year gap from the first. But because of that communication - we need to keep that open and effective - these sessions are always extremely important. I'm glad to see you moving on an annual basis. I think that the opportunity for your professional field is as great as for any professional field in the Corps.

When General Hatch came around with his Focus 90 program this year (he moves around through the Corps with his staff and shares with the staff his views of where the Corps is going and what it's getting), he focused on two points. He focused on the environment and he focused on partnerships. He said he felt the environment (and he was including as part of that the HTW cleanup effort and the total waste cleanup effort and the Corps role in that) was very important. In partnerships he was talking about partnerships with other agencies and the growing need to have more effective partnerships with agencies like the DOE and he moved that all the way down to internal partnerships that we set up ourselves and focused on that and I think that is extremely key to our operations. I think that you good people are going to become more of a part, a larger part of that overall internal Corps partnership than you have been in the past. I see that to be a growing thing, a necessary thing and a good thing. My bottom line would be that it's an exciting time for a conference of this type, one of the few areas in the Corps that is growing and has a real challenge. I would invite you to take advantage of that and above all, enjoy each other and have a good time. Thank you.

Program to Coordinate Field-Laboratory Interactions and Other Water Quality Topics

Dr. Dave Koran, Ohio River Division

With the recent retirement of my boss, Mark Anthony, I have assumed some of his duties, although probably temporarily. One of these is a position on the Committee on Water Quality and the other is research coordinator in the Ohio River Division. I've been involved with a few meetings of the Committee on Water Quality and there is one thing I'd like to point out that may awaken a few of you and should warn you to treat your brethren in water quality a little bit better. In 1988 there was a request as a result of the Environmental and Water Quality Operational Studies Program and a few other things to look at research targets for the future. Out of two Division offices and 14 District offices that responded, there were 20 research and development targets that were identified. It was very interesting to note that most of those dealt with chemical problems. There were seven or eight on reservoir problems, there were three dealing with waterways which included coastal and riverine, and two with groundwater. Some of the key elements in funding for research in the Environmental Laboratory Divisions at the US Army Engineer Waterways Experiment Station (WES) were the sediment/water interaction contaminants work that is under the direction of Doug Gunnison and the sediment/oxygen demand which also defines a chemistry type problem. In terms of future work units, the one identified with the greatest interest was the contaminant models for Corps projects and number two on that list was application of biodegradation potential for contaminants. I'm hoping we're not going to get into recombinant DNA but I think an appropriate adjustment of that program bases another chemical project that we may get involved in.

One other item that causes a little bit of frustration for me is developing our training programs. As part of my development I try to include environmental division meetings of the American Chemical Society (ACS).

In recent years there have been several topics of interest to the Corps. In 1985 studies on lake chemistry were presented with emphasis on the Great Lakes and contaminants. In 1987 topics included humic substances and pesticide fate/run off modeling and this year in Boston the one main subject I was interested in was the environmental chemistry of small watersheds. In that case they pretty much used the watershed to define the problems. The topic that would be of most interest to us in the Corps, "Organic Substances and Sediments in Water," included some new approaches and one of the subjects brought up was that there is a very active chemistry of suspended sediments. They have an altogether different chemistry than non-suspended sediment. There is some different acid/base chemistry in finding out the lowering in terms of organic carbon and it has some entirely different properties. What was disappointing to me was that there were only two people there from the Corps and when one of the subjects was brought up about some of the research that is taking place at WES, the group as whole was really not aware of anything that we were doing. In that light I contacted Lew Decell down at WES in charge of one of the environmental sections and

we're going to try to get some input in the future. Since we mostly have biologists in the water quality section and we deal with things like bat's wings and Sasquatch hair, we do need some chemical faces so some of your expertise will probably be called on.

Coming up in April of '91 in Atlanta are some subjects that are very important to Corps missions, such as environmental chemistry of lakes and reservoirs. I think that we are very heavily involved and probably possess an awful lot of expertise in this area and it would be a shame not to have representation. The pollution prevention and process analytical chemistry are pretty much on-line work. We do a lot of in situ monitoring programs and shallow aquifer chemistry. It's the first time we've actually looked at groundwater processes in an ACS symposium. Also in wetlands chemistry we're undertaking a very extensive program looking for new avenues in the exploration of wetlands - wetlands processes. Several of the agencies were asked if they had programs in place to look at wetlands work and the Corps was the only agency that had anything in place. We were asked to speed up our program. We have a fairly extensive amount of money dedicated - something like $40 million over 3 years seems to come to mind and they're looking for demonstration projects. A lot of people seem to think that you put a wetlands out there and it cleans up the environment - that it cleans up the metals and everything else. But there's a lot more that goes with it.

Another thing that I think people here like Joe (Svirbely) might be interested in is the quality toxicity testing and associated chemistry going on down at WES. I think there's a full menu and I'm not saying that we are going to bivouac it in Atlanta in April of '91 but if you have some questions about some of these things, I probably will serve as a point of contact and I can probably put you in touch with the appropriate symposium chairman.

MR. SNITZ: Dave, It's good to hear that the level of consciousness for participation in these symposia is being raised within the Corps. Still, you've heard a million times, "It's not the Corps of Scientists, it's the Corps of Engineers." I'd like to hear from others around the room. In my District, if it's something like the Society of American Military Engineers in contrast to the ACS, the support is such that the District will grab bodies, pull you away from your desk, and take you away to a conference. Do we have any potential to reach this exalted state?

DR. KORAN: I'm not sure how much potential we have, I would say if a paper is being presented, by all means you should be able to go. I guess I'm really bringing this up here because this will probably be bumped down into the Division and District water quality offices with some impetus from WES. I don't know how much input we'll get from Headquarters, particularly with regard to papers. Some of you who interact with District people is where I see that you will be brought into this. What I'm saying is that I don't see us doing this type of research in our Division chemistry labs, per se, but what I'm trying to emphasize here is that your expertise is needed and what I'm trying to bring up here in this talk is that those who work in water quality need a lot of chemistry input. We have very few chemists in the Division or the District offices who are doing this. Most of you are pretty much restricted to the laboratories and there is a

need for this interaction and maybe some day someone will wake up and understand what's needed. I have chosen these ACS Division meetings over the Pittsburgh Conference as part of my training for the last 5 years because I see the importance of the studies presented at these meetings as related to my work.

COMMENT: It is a real problem, even at WES, to be able to attend these meetings unless you are presenting a paper. Maybe we should try more often to get our offices to consider these meetings as training and thus remove some of the limitations on attendance.

DR. KORAN: The second part of my talk deals with our chemistry programs at ORD. The need for chemist interaction was recognized in the early 1970's at ORD by people such as Mark Anthony, now retired, Don Robey, now at WES, Glen Drummond, and Gary McKee. With all of the reservoir work and the advent of the National Environmental Policy Act, the need for chemical expertise was recognized and they helped set up the water quality laboratory at the Ohio River Division (ORD) in the Geotechnical Division.

The ORD Laboratory supports the four Districts in the Ohio River Division, as well as some Districts in the North Atlantic Division and the North Central Division. From a Corps of Engineers perspective, projects normally consist of planning, design, and construction. This works well for most projects even including the hazardous and toxic waste (HTW) work. But water quality is more of a watch-dog approach and you have more problems selling monitoring surveys for water quality projects to people who have this mindset. With this thought in mind I am going to spend the remainder of my time discussing the development of water quality projects and interactions between the field and the laboratory. ORD deals with a variety of water quality problems, from steel mill effluents and acid mine drainage to agricultural runoff and hydropower withdrawal.

First I'd like to touch on some of the responsibilities of water quality personnel:

a. Water quality sampling and surveys (defining project operations and environmental concerns).

b. Water quality data to support real time water control decisions such as (1) profiling reservoirs for selective withdrawal, and (2) remote sensing with in-situ instrumentation.

c. Data interpretation to include (1) water quality data, and (2) contaminant data.

d. Sampling in support of other elements.

e. Emergency spill response (i.e., Ashland).

f. Surveys for potential construction or modification.

g. Water supplies.

h. Fisheries and aquatic resources.

i. Hydropower effects on the rivers.

One of the problems that we have run into in the Ohio River Division is the problem of communications and this probably stems from non-chemists trying to deal with chemists. Our language is not deemed to be English by some people. As a result we have come up with some things to try to overcome this. In 1973 paper tags were developed for the field personnel to use when requesting analyses. In the early 1980's adhesive tags were developed and test requests were by STORET number and the concept of group test codes using STORET-like codes was introduced. In the early 1970's the lab provided nutrient analysis using an autoanalyzer and data were handled with a General Electric computer and transfers of results were on paper. They then converted to the Wang system, with inclusion of AA results, and data were transferred electronically. Data management and billing took place on the Harris computer in the Division Office. In 1988, the lab purchased a Perkin-Elmer Laboratory Information Management System (PE LIMS) 2000 system to replace the Wang and the Harris. The lab is still working to make the system fully operational. Hopefully this will solve a lot of our problems.

Organic analysis became routine in the early 1980's and the first basin-wide surveys took place for contaminants. ORD initially contracted out most of their organic analyses. The lab then acquired a GC/MS and more difficult problems were tackled by the lab. Elutriate testing for the dredging programs became a requirement and included analysis for the entire list of priority pollutants. As a result of a Corps-wide study, the lab was required to screen for contaminants at each project on a rotating basis. The lab has also been involved with HTW work over the last several years including Superfund, (Defense Environmental Restoration Program) DERP, and Formerly Used Defense Sites (FUDS).

With respect to the District water quality programs, the collection of baseline data is no longer acceptable justification for a program. It hasn't been for the last several years and we have demanded that our Districts use management tools for water quality, including the wider application of models such as those developed in the past as well as down at WES and the use of (PCs) with commercial software to look at our data. As you know, most of our biologists in their training have a pretty good handle on statistics and once they overcome the interface problem they find the computer keyboard really is friendly. They become experts at interpreting the data and find things they never knew they had. The District water quality personnel have now been identified as the local experts on chemical contaminants as well as interpretation of chemical data or analysis. However, they need assistance from the laboratory in the actual interpretation of the chemical data and we need to work together to be sure that this line of communication remains open. Our responsibility in the lab doesn't end with the production of results.

Several years ago we set up a 2-day workshop for the field (QA/QC) to determine if problems that existed in analysis produced from the laboratory might really be the result of poor field practices. One of the things that caused a real stir was the proposal to collect duplicate samples. This involved sampling the profiles in lake stations to see if you could even pull the same samples that were reproducible. How good is the actual sampling effort? We also split samples, sent in field blanks, distilled water blanks, and

reagent blanks. One thing I was trying to do was to tackle the phosphate problem by comparing field data to lab data. We are still working on that. Initial analyses show that the degree of variability as a result of field procedures was no greater than that occurring in the lab. The conclusion is that the quality of effort in our field procedures is as good as that coming out of the laboratory. This is probably due to the use of experienced personnel to do the sampling.

Sample tags are the primary communication between the District water quality office and ORD environmental lab. The greatest problem that we encountered was that of transcription errors. To solve this problem, electronic request for testing seemed to be the only answer. Tags were also becoming outdated and this was a good opportunity to "remodel." Electronic tags were developed as simple replacements for the paper tags. This allowed the District to request testing in the District office and ship the file directly into the laboratory computer so that test request files could be generated. This improvement was to eliminate transcription errors and it also was a way to get some District offices into the electronic age. For the most part this does work when the system is up and properly operating. We are finding out there is a lot of ambiguity in the requests, where the sample comes from, how the samples are reported, etc., and we're making an effort to correct that. There are no STORET numbers for a lot of these and we had to make dummy STORET codes.

As I said, we've had a lot of problems dealing with communications and a lot of this stems from non-chemists dealing with chemists. I realize you can't always get what you want. But in the field we keep getting the response from the lab that "The LIMS is coming! The LIMS is coming!" and that's going to change everything. So we've had to change our approach slightly. One of the things that we've run into in the past was the limitation on the size of the computer field. Hopefully this new system will eliminate the restrictions on request information.

Another thing that we've been asked to do is develop a general sampling scheme and develop logic to choose options station by station. Station IDs were added to the District program file as well as tag IDs. We set up options as standards, i.e., typical nutrient tests, typical metals. Several categories might be suggested to eliminate the need for entering all the parameters individually. We looked for a scheme that allowed scheduling of tests in the District and a program that addressed organic testing. Sometimes testing is done in the field or in the District lab and we wanted to allow for this input. We also looked at generating field sheets that were in plain English so that we could provide verification of proper sample collection. In addition we needed a system that would generate a chain-of-custody form.

QUESTION: How do you resolve problems when you run across errors in the field sampling?

DR. KORAN: Mostly we try to change technique or change procedures to eliminate them. We try to find out where we went wrong. We have four Districts and they all do things differently. This makes it difficult when we are trying to standardize. In some cases we pump samples, in others we pull them up with a Kemmerer sampler. Both are

technically correct although I personally don't like to pump samples. We have shown that there is not a significant difference in data.

QUESTION: For your water quality programs, do you establish the samples and parameter a year ahead of time?

DR. KORAN: Some of them are done that way. Again, I'm having a lot of difficulty with this right now because we are being asked to standardize for our sampling program, while our sampling program from my perspective responds to the needs of the project, reservoir by reservoir or basin by basin. It's very difficult to standardize when you are being asked to provide more detail in some cases and less in others. I think sampling is going to have to pretty much be site specific. We had a request by one District to go one step further and include a scheduling option, a budget determination, chain-of-custody, and allow for customization.

We have also introduced bar coding so that you have a minimal amount of transcription errors. This may not seem like such a big deal, but when you're trying to get ink that will stand up under field conditions and adhesive that will stick to these bottles, this can really be a problem.

As I said we have a generalized sampling scheme. In effect, for reservoirs we try to sample by the inflows and outflows. A basic scheme is shown in Table 1. We then proceeded to customize the program as much as possible as shown in the scheduling program (Table 2).

Some of the things we still are working on, such as the budgeting aspect. And after all of these are done we still have some problems to work out in order to standardize reporting. We need to request that the Environmental Protection Agency assign STORET numbers for priority pollutants for elutriate testing. The current terms available are total, mud, dissolved, and suspended. In using transport equations from a hydraulic consideration, dissolved, suspended, and total values are considered physically and equations with associated partition coefficients/constants are used. There is no "real world"/"engineer" use for elutriate values except as a go-no go for permits. So I guess I'm really asking, do we need these STORET assignments?

DR. SOLSKY: It looks like you've spent a tremendous amount of time and effort developing these computer systems. Within our two Districts at Missouri River Division (MRD) we're undergoing similar development exerting a lot of effort and expending a lot of manpower. I would think it would be to everyone's benefit if we sat down and developed unified systems here so that all field people received the same sheets, the computer systems are the same, and the transfers are the same. But we are reinventing the wheel, it looks like every area here is doing the same thing and that seems like a tremendous waste of effort.

MR. KORAN: Probably so. We probably need to address the water quality committee with this. Even within our own Districts we still have one District where people are going out with masking tape on the bottles and then they fill out a field tag when they get back to the District office. They have very detailed log books, they are very

Table 1
Sampling Scheme

Parameter	Outflow	Withdrawal Structure Surface	Surface-10 [.5(ED-5)]	Surface-20 [(ED-5)]	Bottom-5 [B-5]	Intermediate I [.5(ED+8)-5]> (ED-10)]	Intermediate II	Intermediate III
Physical								
Temperature, DO								
Conductivity, pH	X	Every 5 ft* starting at surface, locate epilimnion to the nearest foot.						
Biological								
Chlorophyll	X	X	X	X				
Phytoplankton		Sample for count and dominant taxa						
Chemical								
Nutrients	X	X	X	X	X	X		
Nitrate-nitrate								
TKN, ammonia								
Total phosphate								
Chloride								
Sulfate								
Alkalinity	X	X	X	X				
Total Organic Carbon								
Metals								
ICAP	X	X	X	X	X	X	X	X
Sodium, Potassium, Calcium, Magnesium, Iron, Manganese, Aluminum, Zinc, Barium, Beryllium								
Trace Metals	Y				Y			
Chromium, Copper, Nickel, Cadmium, Lead								
Arsenic, Selenium	Y				Y			
Mercury	Y				Y			

Total cost for chemical analysis for a project with a depth of 80-100 ft at the withdrawal structure for four intensive surveys during the period of stratification where chlorophyll determinations are done in house in the District and alkalinity titrations are performed on the boat or at the project:

= (6 x 4 x $90) + (4 x $45) + (2 x $70) + (2 x $28) + (2 x $17)
= $2,570

X = sample during each survey
Y = sample once per year

* A table of factors for converting non-SI units of measurement to SI (metric) units is presented on page viii.

Table 2
Scheduling Program

This the tag scheduling system. This system will assist the users in:

[A] Developing tags with user-selected test while creating a budget, field sheet, and schedule.

[B] Printing A field sheet.

[C] Printing A budget.

[D] Printing A schedule.

[E] Utilities.

[F] Station-ID editor.

[G] Field transfer to A drive.

[Q] Quit.

User should enter (A, thru G or Q)

Command ||<C:>|| || || ||

Figure

---

qualified individuals, but I had to drag them into the 20th century to get them to use the PCs and manipulate the data this way instead of dealing with paper.

DR. SOLSKY: We have a chemist at MRD devoting full time to setting up a LIMS system including water quality and its looks like you've got people doing the same thing.

DR. KORAN: We need some links in there between the laboratories and the field and I'm still working on that. I'm actually here representing the water quality people and most of you are from the labs.

DR. DAVIES: Maybe you would be better off using something like a sample tracking report rather than a chain of custody record for water quality. I think I would consider some other term since you are primarily interested in tracking the sample rather than the legal aspects of a chain-of-custody. And another thing, are you always working under the assumption that the same detection or quantitation limits are needed for all these parameters? Or is there some way that you enter those into STORET or into the system?

DR. KORAN: No, that has been a major concern expressed constantly by the District offices, knowing what detection limits they're dealing with when looking at the data. We have hoped for some documentation, but it hasn't always been there. We at least would

like to know what detection limits were being used. Trying to pull together and use this data has caused a lot of concern. How do you handle data below detection limits and variances below detection limits? A guy up at the University of Washington has been studying the problem of how to use data below detection limits and he suggests using a random number generation for all those values below detection limits in actually using that database and assigning a number to it. But this did present a weak link when trying to associate two different types of databases where you have different detection limits. The jump is not always valid but the numbers that are produced are something that you can work with.

COMMENT: Unless you can agree on some generally accepted set of detection limits which is very reasonable and then have some way of flagging them in the laboratory.

DR. KORAN: Part of the problem with documentation in the past has been the limitation on the size of the records. Hopefully in the future we can come up with enough information on the data to make decisions that are valid. We have basically said that we are going to set up working detection limits, however we realize that the detection limits may vary from day to day depending on the type samples that you are working with.

One problem that we have run into relates to some fish studies that were done in the Ohio River basin where the Food and Drug Administration was looking at samples but results were not available until a year or so after collection. Originally the detection limits were quite high on the order of 5 ppb and nothing was being seen, but then they lowered the detection limits to 2 ppb and suddenly things like chlordane and polychlorinated biphenyls (PCBs) were showing up. They are now getting more rapid response. We have what we think is an arsenic problem in the basin. From a human health perspective there may not be a problem, but where do we set the limits?

QA/QC Data Comparisons - Agreement Or Disagreement

Dr. Joe Solsky
Missouri River Division Laboratory

What I'd like to chat about this morning is that one of the primary functions that the Division Labs are getting involved in now is serving as quality assurance (QA) laboratory at these hazardous and toxic waste projects. That duty involves a variety of different tasks, many of them unrelated. Some of the duties were brought up by Dave a few minutes ago. One of the important duties that we have is to generate quality assurance data. This QA data is generated via in-house capability or through contracted laboratories and represents the analysis of samples that are split by contractors in the field. The contractors are themselves analyzing these same samples in their own laboratories. And it is basically up to the Division labs then to compare these sets of data, the QA versus the contractor, and come up with a judgment or decision. Do they or do they not agree? What constitutes agreement here?

Because our program is unique and different from the Environmental Protection Agency there are no established standards for dealing with these kinds of data comparisons. Certainly we can deal with samples that are run within the same lab as laboratory duplicates. We can deal with field duplicates. But to some extent, comparing data generated between two different laboratories really presents a problem. I've been dealing with a number of the Division laboratories who are doing these reports right now, but it seems like we all have slight or more major differences in doing these things, even in determining what is agreement and what is disagreement.

When data disagreements do take place, there are a wide variety of possible reasons for this. Don't expect the data to agree right offhand. When you do sit down and compare, you will see data variability. That is simply inevitable. The methods that we are dealing with are just not that precise. Even if you look at some of the standard organic procedures and inorganic procedures and look at internal laboratory duplicates you will see widely varying levels of agreement. Some of these levels can vary significantly even up to a factor of two. So again, what constitutes agreement?

The most obvious reason for disagreement is the lack of a homogeneous sample. Some sites lend themselves well to a homogeneous sample such as where you have a nice sandy soil, a nice uniform soil that mixes well and composites well. But if you find a site that has extremes with rocks and trash and bullet cases in it, it becomes a little more difficult to compare samples. So just the nature of the samples themselves can make comparison difficult. People in the field are compositing the samples together, putting your sample in one jar and they're taking another jar. Who's to guarantee that these two samples were indeed the same?

Another difference is simply the methodology variations from lab to lab, even though you may specify Method 8240 for volatiles. What does that mean? How that is interpreted by lab X may be entirely different from lab Y. So you also have these types of variations. Different laboratories generate different detection limits. What does that do

to the comparability of the samples? Then there is the possibility of bad data. Simply, the labs goofed. One messed up. Even though they claimed to have followed appropriate methodologies, they didn't do so, maybe due to "profits." I really haven't put together any formal statistics because of the variability.

We were and are involved with a very large project out at the Missouri River Division (MRD) Lab. This is the Nebraska Ordnance Plant. We were the field lab, the quality control (QC) lab. The QA samples were sent to us and we contracted them out to other laboratories and we sort of did the data comparisons in house on our own work. So this gave us a pretty good idea of how good data comparability can get. We did this in a couple of different ways. I'd like to show you some actual laboratory charts and graphs of data. On metals work there is a good representation of inorganic work and then for organics we looked at explosives.

What we have here in Table 1 are essentially internal laboratory comparisons. At this site we analyzed a series of metals but the only ones that showed consistent hits were the barium, chromium, and lead. Each one of these data pairs represents an individual sample coming from the field. QC1 is a separate subsample from the same container. Another problem in comparing this data is how the laboratory subsamples the jar. During metals analysis, the procedure calls for simply taking a 1-g sample. Does this mean that out of an 8-oz jar, the laboratory is just going to dig in there with a scoop for a 1-g sample? You have a problem if you do that, obviously. Even within that jar you are going to see a certain level of inconsistency. So what we try to do is take a larger subsample. We take on the order of 30 to 50 g and grind it up and get a nice uniform sample representative of all parts of the jar. Pick out the extraneous material. Take out the large rocks, worms, sticks, and bullets so that you have something that is really consistent. You can dry the sample before grinding so that you have a very fine powder from which to take your 1-g subsample. So looking at this data, the first number that you see is the first subsample and QC1 is the second completely different subsample from that container. Note that the agreement is very good. For barium there is only one set of numbers that varies and we may be able to throw that out if we apply statistics. The rest of the numbers are very consistent. All of these samples were run in the lab at MRD. However data such as this can present a problem for a regulator. For example, the cutoff value for lead is usually 50 mg/kg and a couple of these data sets have one value above 50 and one value below 50. How do you use this data? The customer has to be aware of the variability of data.

We then generated additional data as shown in Table 2 by contracting out to one of our subcontractor laboratories. The "MN" numbers represent the original field samples analyzed at MRD. QA1 represents a separate subsampling from that same container that was just taken by stirring the sample and taking an aliquot out in the wet state to send to our contract laboratory. QA2 is a subsample of our dried and ground sample that we had prepared in house for analysis. We also sent this to our contract laboratory. As you can see from the results, the data agree quite nicely. There are some variations, but not as large as I had expected to see, considering that the contract lab was using different standards, different instruments, different calibration curves and probably not the

Table 1
QC Comparisons for Metals Results
mg/kg

Sample ID#	Barium	Chromium	Lead
MNOP-D201-0002	221	24	70
QC1	219	21	95
MNOP-D205-0004	155	13	49
QC1	166	16	63
MNOP-D213-0002	359	23	36
QC1	300	25	47
MNOP-D226-0014	376	33	16
QC1	316	26	14
MNOP-D230-0002	303	25	26
QC1	293	28	27
MNOP-D235-0002	813	31	125
QC1	285	28	166
MNOP-D241-0002	245	29	45
QC1	227	21	40
MNOP-D252-0002	263	25	39
QC1	262	26	77
MNOP-D254-0002	273	23	36
QC1	264	24	35
MNOP-D262-0007	374	25	14
QC1	394	24	12
MNOP-D269-0007	371	28	15
QC1	371	25	13
MNOP-D270-0004	241	26	53
QC1	246	22	48
MNOP-D272-0002	305	26	20
QC1	284	24	20

Table 2
QC Comparisons for Metals Results
mg/kg

Sample ID#	Barium	Chromium	Lead
MNOP-D201-0004	291	29	46
QA1	321	20	10
QA2	272	20	48
MNOP-D205-0002	205	21	331
QA1	180	17	254
QA2	245	22	331
MNOP-D226-0002	356	34	58
QA1	317	28	50
QA2	351	41	116
MNOP-D233-0007	345	31	13
QA1	311	21	11
QA2	362	29	12
MNOP-D236-0002	269	23	31
QA1	268	25	30
QA2	378	36	47
MNOP-D238-0007	286	28	17
QA1	416	38	23
QA2	500	52	24
MNOP-D239-0016	12	3	u
QA1	10	2	u
QA2	9	2	u
MNOP-D245-0002	302	25	22
QA1	266	21	18
QA2	306	22	17
MNOP-D246-0002	284	26	16
QA1	258	19	15
QA2	349	28	21
MNOP-D247-0002	221	21	198
QA1	195	18	104
QA2	230	20	124
MNOP-D255-0002	279	31	84
QA1	247	19	52
QA2	306	27	89
MNOP-D256-0002	258	30	48
QA1	197	21	27
QA2	257	27	58
MNOP-D260-0002	186	20	576
QA1	198	22	608
QA2	305	48	858

same testing technique and yet the data compare very well between the two laboratories. So in terms of metals we can get good agreement, probably a little better between our lab sample and QA2 because of the better homogeneous mixture used for the split.

QUESTION: Did you do all of the analysis?

DR. SOLSKY: No, QA1 and QA2 were done by a contract laboratory and the original samples were analyzed at the MRD lab.

QUESTION: Were QA1 and QA2 sent to the contractor at the same time?

DR. SOLSKY: No, they were sent at separate times because we wanted to include that variability as well. The samples were shipped about a month apart, so they were not run in the same batch. The contract lab received QA1 as a wet sample and QA2 as a dried and ground sample. All results are reported on a dry weight basis.

We have been considering differences of a factor of 10 as major differences between the primary lab and the QA lab, but based on these results, perhaps that range is too big, maybe it should be shrunk down a bit. Generally laboratories running similar procedures with good personnel will generate good data.

QUESTION: Do you suppose that different soil types might not show greater variability than this?

DR. SOLSKY: Yes. What we would like to do, as we get large projects in, is to perform similar studies on them and develop a large database of information and from there I think we can give QA laboratories a better handle on what is data agreement.

QUESTION: Are these all ICP analyses?

DR. SOLSKY: Yes, they are all ICP. We were using a sequential and the contract lab was using a simultaneous. Our detection limits were about 5 mg/kg and the contract lab's limits varied between 10 and 15 mg/kg.

QUESTION: Based on this data, do you have a feel for whether the biggest differences are due to differences in laboratory analysis or to differences in the generation of the subsamples?

DR. SOLSKY: In this particular case I suspect that the subsampling will generate the larger error.

QUESTION: How do you calculate the variation?

DR. SOLSKY: At this particular time we simply look at the ratio obtained when dividing one value by the other and if this factor is less than our routine 10 times difference then we accept it without flagging the data. We haven't tried to normalize the data at this point.

Let's take a look at some organic data when that was done. What I have are some explosives data using essentially the same perspective. There were approximately 500 samples generated for this project. They were all analyzed for seven different

explosive compounds. Table 3 is the internal quality control data. These samples came in two separate 8-oz glass jars. The field sample with the full sample identifier on it was sampled from one of the jars. Several ounces of the sample were taken from random places in the jar, they were air-dried, they were pulverized, ground, and sieved. The rocks, bullets, sticks, etc. were taken out. A second sample, QC1, was taken from the second jar and the procedure duplicated. These are true field splits. Here again I was amazed at how well the data agreed. I think our worst variation is a factor of 2 or 2-1/2. This is amazing when you consider the range of detection limits of HMX at about 2.0 and TNT down at 0.2 or so. So a lot of these data are very near detection limits. These samples were collected by in-house District people. I'm not sure we'd get comparisons that good from contractor-collected samples. I was particularly amazed at the data because some of these compounds are difficult to test for. Tetryl will simply disappear from the samples when they sit after being separated for analysis.

We then took these samples and treated them in much the same way that we did the metals. In Table 4 the QA samples were analyzed by Tom Jenkins' lab at the US Army Cold Regions Research and Engineering Laboratory (CRREL). His lab developed a lot of this work in the first place and we felt the best place to go for a second opinion was to the experts themselves. Here the two samples from the field were mixed by the MRD and put in two separate jars. One of the jars was then sent to CRREL for analysis. CRREL data for this sample are labeled QA1. The sample that was analyzed at MRD was dried and ground using our standard procedure and analyzed. These data are identified with the full sample designation. A subsample of the dried and ground sample was sent to CRREL at a later date for analysis. These data are designated as QA2. Again these data really surprised me. There are usually large variations in organic data. Organic analyses are much more difficult to reproduce. There are a lot of fluctuations that you can encounter. Particularly when you look at the tetryl data, even that has very good agreement. As we look at the rest of the data, notice what happens. On QA1, the separate container, the values are considerably lower, some by a factor of 10, but when you look at others taken from QA2, which is a subsample of the dried and pulverized material, now all of a sudden the data agrees. It's not all lower, it's not all higher. It is a true random distribution that we see. And I see here that Tom gave up on one of them after so many dilutions. I guess he figured if it was that high there was no need to get an exact answer. But we sent samples from varying depths. If you look at the sample numbers, the last number is indicative of the depth. The lower the number, the nearer the surface, the higher the number, the deeper down it goes. Even with all the variation in samples, it's amazing how well the data agreed.

QUESTION: You did say that you used a factor of 10 to identify major disagreement?

DR. SOLSKY: Yes, but for this data, I would go with a lesser number although there are some differences up around 10. But when we start gathering all these data and apply statistics to them, I'm sure the numbers at a 95-percent confidence interval for this site will be far less than 10. But when I look at all our other projects and all the

Table 3
QC Comparisons for Explosive Results*
mg/kg

Sample ID #	HMX	RDX	TNB	DNB	TET	TNT	DNT
12-12-40E-BBA	u	u	u	u	1.0	u	u
QC1	u	u	u	u	1.4	u	u
12-12-4E-BBA	u	u	u	u	u	u	u
QC1	u	u	u	u	u	u	u
12-13-13E-BBA	u	u	u	u	22.8	u	u
QC1	u	u	u	u	53.2	u	
ENOP-D201-0008	u	u	u	u	u	1.3	u
QC1	u	u	u	u	u	0.4	0.2
ENOP-D210-0001	u	u	u	u	u	0.3	u
QC1	u	u	u	u	u	0.3	u
ENOP-D220-0008	u	0.9	u	u	u	0.5	u
QC1	u	1.4	u	u	u	0.5	u
ENOP-D222-0003	20.8	35.6	124.2	0.6	u	985.9	u
QC1	18.8	38.8	122.7	0.5	u	1,926.5	u
ENOP-D228-0012	u	5.8	22.6	u	u	u	1.5
QC1	2.4	3.0	2.1	u	u	u	0.3
ENOP-D230-0006	11.9	60.5	93.7	u	u	12.8	u
QC1	23.3	82.6	117.6	u	u	22.3	u
ENOP-D238-0017	u	u	2.6	u	u	0.8	u
QC1	u	u	2.0	u	u	0.8	u
ENOP-D244-0001	u	u	u	u	u	u	u
QC1	u	u	u	u	u	u	u
ENOP-D249-0013	5.7	29.2	68.7	u	u	0.6	3.6
QC1	4.7	26.7	69.4	u	u	0.3	3.5
ENOP-D269-0003	u	u	u	u	u	0.9	u
QC1	u	u	u	u	u	0.7	u
ENOP-D270-0008	u	u	u	u	u	0.3	u
QC1	u	u	u	u	u	0.3	u

* u indicates below detection limits.

Table 4
QC Comparisons for Explosives Results*
mg/kg

Sample ID #	HMX	RDX	TNB	DNB	TET	TNT	DNT
12-12-36E-BBA	u	u	u	u	221.0	7.0	u
QA1	u	u	u	u	397.0	u	u
12-12-38E-BBA	u	u	u	u	81.6	1.0	u
QA1	u	u	u	u	73.3	u	u
12-13-1E-BBA	u	u	u	u	732.7	u	u
QA1	u	u	u	u	1260.0	u	u
12-13-20E-BBA	u	u	u	u	831.8	u	u
QA1	u	u	u	u	973.0	u	u
ENOP-BBA-SS3-0001	u	u	u	u	u	u	u
QA1	u	u	u	u	u	t	u
ENOP-BG3-0007	u	u	u	u	u	u	u
QA1	u	u	u	u	u	u	u
ENOP-D221-0001	116.8	752.9	87.7	1.0	u	265.6	u
QA1	12.0	104.0	14.5	1.5	u	2,809.0	2.7
QA2	82.0	803.0	100.0	2.2	u	297.0	2.2
ENOP-D223-0003	50.7	259.8	135.2	0.9	u	147.9	0.7
QA1	13.0	60.0	74.1	0.9	u	81.0	3.0
QA2	21.2	241.0	143.0	1.9	u	139.0	4.4
ENOP-D226-0003	86.6	759.4	0.9	u	u	7.8	u
QA1	93.2	986.0	0.9	u	u	4.4	u
ENOP-D228-0014	u	2.4	10.9	u	u	u	0.8
QA1	t	3.6	13.5	u	u	u	1.0
QA2	t	3.5	14.5	u	u	t	1.1
ENOP-D233-0008	u	u	u	u	u	u	u
QA1	u	t	u	u	u	t	u
ENOP-D242-0003	u	28.6	102.0	0.6	u	46,322.6	26.0
QA1	u	19.9	42.5	1.4	u	>20,550.0	16.6
ENOP-D249-0010	6.1	22.2	56.3	u	u	3.6	2.4
QA1	3.4	19.0	73.9	t	u	2.2	3.3
QA2	3.3	19.1	71.1	u	u	4.0	3.2

(Continued)

* u indicates below detection limits.

Table 4 (Concluded)

Sample ID #	HMX	RDX	TNB	DNB	TET	TNT	DNT
ENOP-D255-0010	3.9	10.7	2.1	u	u	u	u
QA1	2.3	13.6	2.7	u	u	t	t
QA2	2.2	13.2	2.8	u	u	t	t
ENOP-D261-0003	u	u	0.3	u	u	5.4	0.4
QA1	u	u	t	u	u	6.8	0.2
QA2	u	t	u	u	u	7.3	0.6
ENOP-D265-0005	u	u	1.2	u	u	518.2	0.3
QA1	u	u	0.9	u	u	259.0	u
ENOP-D273-0008	u	u	u	u	u	0.5	u
QA1	u	u	t	u	u	0.3	0.2
QA2	u	u	t	u	u	0.5	0.2

data that we have starred because of major disagreement, I shudder to think about it. You can get very good data agreement, but it doesn't always happen.

And now I want to share some data (Table 5) where we have some serious disagreements and get everybody's opinion on a real site where no special handling or preparation occurred. This is a remedial investigation project. At this site our lab ran QA samples for the explosives and the contract lab provided the primary data. For the seven soil samples that were split, only three could be considered in true agreement and those did not show detectable levels of explosives by either lab. The contract lab had a detection limit of about 3.0 for TNT and our lab had a detection limit of about 0.2, or a factor of 10 lower. Here we have a major data disagreement and probably of the worst kind because the contract lab is reporting false negatives indicating that the site is clean when in reality it may not be. This is a case where their laboratory quality control would pass anybody's criteria. Their spikes are perfect, their duplicates are perfect, and yet the QA samples indicate that there is a problem.

This was not just a case where soils did not agree. We also have splits for three water samples (Table 6) and two of them did not agree. We detected significant amounts of TNT in two samples and they reported 2-Amino-4,6-Dinitrotoluene for the same samples, but no TNT. We did agree on the presence of 2,4-Dinitrotoluene in one of the samples. On one of the samples showing disagreement, they reported matrix interference throughout the entire chromatogram; our lab showed no interferences.

QUESTION: Are you both using the same type detector?

DR. SOLSKY: Yes, the same type, but different manufacturers. But you would have expected the quality control to pick up any problems.

Table 5
Comparison of Explosives Analysis in Soils*
mg/kg

Compound	Sample 1		Sample 2		Sample 3		Sample 4		Sample 5		Sample 6		Sample 7	
	Contract Lab	MRD	Contract Lab	MRD	Contract Lab	MRD	Contract Lab	MRD	Contract Lab	MRD	Contract Lab	MRD	Contract Lab	MRD
HMX	5 u	u	5 u	u	5 u	u	5 u	u	5 u	u	5 u	u	5 u	u
RDX	4 u	u	4 u	u	4 u	u	4 u	u	4 u	u	4 u	u	4 u	u
1,3,5-Trinitrobenzene	2 u	u	2 u	u	2 u	u	2 u	u	2 u	u	2 u	u	2 u	u
Nitrobenzene	2 u	u	2 u	u	2 u	u	2 u	u	2 u	u	2 u	u	2 u	u
Tetryl	20 u	u	20 u	u	20 u	u	20 u	u	20 u	u	20 u	u	20 u	u
2-Amino-4,6-Dinitrotoluene	2 u	u	2 u	u	2 u	u	2 u	u	2 u	u	2 u	u	2 u	u
2,4,6-Trinitrotoluene	3 u	5.6	3 u	u	3 u	12.1	3 u	4.8	3 u	24.7	3 u	u	3 u	u
2,6-Dinitrotoluene	2 u	u	2 u	u	2 u	u	2 u	u	2 u	u	2 u	u	2 u	u
2,6-Dinitrotoluene	1 u	u	1 u	u	1 u	u	1 u	u	1 u	u	1 u	u	1 u	u

* u indicates value below detection limits.

Table 6
Comparison of Explosives Analysis in Water*
ug/L

Compound	Sample 1 Contract Lab	Sample 1 MRD	Sample 2 Contract Lab	Sample 2 MRD	Sample 3 Contract Lab	Sample 3 MRD
HMX	20 u	u	20 u	u	64 u	u
RDX	20 u	u	20 u	u	23 u	u
1,3,5-Trinitrotoluene	3 u	u	3 u	u	10 u	u
1,3-Dinitrobenzene	3 u	u	3 u	u	10 u	u
Nitrobenzene	3 u	u	3 u	u	9.6 u	u
Tetryl	3 u	u	3 u	u	20 u	u
2-Amino-4,6-Dinitrotoluene	3 u	u	9.6	u	87	u
2,4,6-Trinitrotoluene	3 u	u	3 u	7.5	15 u	92
2,6-Dinitrotoluene	1 u	u	1 u	u	10 u	1.6
2,4-Dinitrotoluene	1 u	u	1.2	4.6	22 u	6.0

* u indicates value below detection limits.

Now that we have identified these major differences, what do we do? As QA laboratory, we have no authority to do anything about this, but what course of action do we take? First, we call up the project manager and tell him we have a problem and we need to sit down and discuss it. At this point in time these differences may or may not present a problem for the outcome of the project. It depends on how the data are going to be used. So this is where we see differences in the way hazardous and toxic waste (HTW) projects are handled and the way water quality projects are handled. For water quality the District personnel usually make the data interpretations, whereas for HTW, it is usually the Division lab chemist who makes the initial data quality evaluation. We will probably now have meetings with the project manager, the A/E contractor, and the contract lab to resolve these differences. Not only will the contract lab have their technical experts available, but they will also have their lawyer types in the picture. So the QA lab must be sure that their data are impeccable and very careful that all of their QC is above reproach. The documentation has to be good. In addition to good data, we have to have very knowledgeable people to go head to head with these contractors. They may have multi-million-dollar budgets to support their work. Is the problem in the extraction, the sampling, or the instrumentation? Our people have to be very familiar with all phases of the analytical process.

I would like to add one more thing. This is a current problem and what we resolve here on this explosives data will impact this project and other projects as well. So we are going to sit down with all of our experts and see if we can come up with the best course of action.

QUESTION: Did we send them audit samples containing these analytes?

DR. SOLSKY: At the time this project began, we had not completed the validation process. But to answer your question, yes, we had sent them audit samples twice and they had failed both times. But it was kind of simultaneous with their analysis of these samples. This leads us to believe that there is something wrong with their methodology.

MR. WEBB: Because of this data discrepancy, I'm going to have to go back and resample one site. So we can't afford to be wrong. In this case depending on the contract interpretation, the contractor may or may not be liable for the additional sampling.

COMMENT: On this data a lot of the differences are apparently due to matrix interferences and raised detection limits. A lot of the labs we deal with don't bother to try to resolve matrix interferences. They just raise their detection limits to cover the problem.

Problems Facing Corps Labs

Ms. Ann Strong, Moderator
US Army Engineer Waterways Experiment Station

DR. SVIRBELY: I'd like to compliment Richard Karn at the US Army Engineer Waterways Experiment Station (WES) on the "QA Guidelines for Organic Analysis" paper. It is a very useful reference.

QUESTION: Where can we get copies?

MS. STRONG: We have them available from WES. They were sent to all the Division offices and people on the Water Quality mailing list, but apparently they did not trickle down to all of you.

MR. GOUDA: We have a problem trying to keep current with our instrumentation. Some years we have PRIP money available and other times we don't get any. Does anyone have any suggestions as to how we can keep current?

DR. DAVIES: It seems to me that we are going to have to start pursuing acquisition means other than PRIP. There should be some way we could allocate money based on the number of analyses we do.

MS. STRONG: Maybe this is something that will come out of the Division Lab survey. It's unfortunate that for most of our Division Labs PRIP is their only source for instrumentation.

MR. PAXTON: Another problem with PRIP is that you have to make the request 18 months before you get the money and the requests from the Division labs usually wind up way down on the bottom of the list.

MR. GOUDA: Can we buy instruments with money we get from hazardous and toxic waste (HTW) projects?

DR. DAVIES: If you do, you're breaking the rules.

MS. STRONG: Theoretically, if you buy a piece of equipment with project funds, it is supposed to be used for that project. That's the reason for buying with PRIP; because it is for across-the-board projects.

DR. DAVIES: I don't know how they managed it, but some of the Division Labs have had Districts to buy pieces of equipment for them. Tulsa District bought a GC/MS for the Southwest Division.

MS. STRONG: Tulsa District is a Demonstration District and as long as there is no Army regulation prohibiting it, they can do things like this. This is a model project to see if this is the way to do business.

MR. GOUDA: With the emphasis on quality assurance/quality control in the Division Labs, maybe we could set up some minimum requirements for operation and seek assistance from (OCE) to maintain this level.

MS. STRONG: This was one of the topics that was covered in this Division Lab survey—the minimum staff and instrumentation needed to operate a viable QA Lab.

MS. STRONG: I have a question for all of you. Can the Corps actually support seven or eight fully staffed and equipped laboratories?

MR. ADAMS: I think so, we're contracting out millions of dollars now.

MS. HUTCHINS: If we have so much work and we need to support ourselves, why are we under the constraints of this freeze?

MR. ADAMS: One of the things that should point out the need for QA labs is the data problem that we are uncovering here. It clearly shows that QA is a government function and should not be contracted out. We need our own resources with our own laboratories and personnel so that we can assure the quality of data that's being generated by the contractors.

MS. STRONG: I made that pitch in this Division Lab survey and I'm sure that Marcia and Joe and some of the others had some input as well.

MR. PAXTON: The initial feedback from the survey is that the Division Laboratories don't do quality assurance.

DR. DAVIES: Whoever says that is not doing analytical work for HTW sites. They're building nurseries on installations.

MS. STRONG: It's not just in the HTW work that these data problems occur. It's in the Dredging Program and it's in the Water Quality Program.

MR. BALIFF: QA is a government function. I think that those of us who are dealing with this on a daily basis understand this, but you have to keep feeding this up through your system and keep educating your bosses about the problems that you encounter and the work you do to correct them. Joe, the discrepancies that you encountered with your explosives - those are the kinds of things that need to come up through the system to the chiefs and commanders to make them aware of the services you perform. One of our District commanders had no appreciation for the labs until he ran up against an environmental problem and now he is a proponent of the system. It took some education - so you have to keep feeding this information up through the system.

DR. SVIRBELY: Since we are a military organization, how are we going to justify the maintenance of our civilian spaces when the military is facing such big cutbacks?

MS. STRONG: The forecast is for much bigger cuts in the military than in the civilian staff and I don't think you will see cuts in the environmental programs. If anything, they will expand.

MR. BALIFF: In HTW and environmental programs, we've been growing.

MS. STRONG: There is the potential for growth in the area of contaminated sediments. Legislation is currently being proposed in that area. So I don't see the environmental programs taking cuts.

DR. HEITKE: Back to the question of why obtaining equipment under PRIP is such a difficult problem. We have decreasing program requirements in civil works and other reasons for spending PRIP money. We have an increasing emphasis on environmental stuff. Why is it that in our Divisions we can't justify the purchase of equipment through PRIP or why is that becoming more difficult?

MS. STRONG: Well, the DERP program is a military program, the PRIP program is a civil works program. At WES we use a fund called RD T&E to make military purchases.

MR. PAXTON: You can purchase equipment on PRIP and use it for DERP as long as it is predominantly used for civil functions. You have to say this equipment is going to be used 60 percent for Superfund, or civil works water quality, etc.

MS. STRONG: PRIP is funded with civil dollars.

MR. PAXTON: I don't think obtaining PRIP money is any more difficult than it ever was. We just have to anticipate ahead what our needs will be.

DR. KORAN: In some Divisions I think the problem lies in who sets the priorities for how the PRIP money will be spent.

DR. SVIRBELY: We have the problem with having a new mass spectrometer system, but we haven't been allowed to hire someone to operate it and it's very difficult to make full use of the instrument operating it on a part-time basis.

MS. STRONG: I'm afraid we're all guilty of that. We buy instrumentation hoping that we can find the personnel to operate it.

DR. KORAN: That's the reason we have to develop good relations with our Districts. Because that Division Engineer is going to listen to the people in the field and he's going to place his priorities where he hears praise from them.

Analysis of Metals in the Environment
Current Status Of ICP Procedures

Ted Shannon, Chemist
Missouri River Division Lab

Most of our Division laboratories are becoming quality assurance (QA) laboratories that are responsible for millions of dollars of site cleanups. Therefore I am going to speak more about the importance of quality control (QC) in the Corps quality assurance program. For our work as quality assurance labs to continue, we must keep strict control of our results. Corps labs and contracted labs must maintain highly accurate and precise results. We must generate a paper trail and data that are defensible in court. This starts with sample documentation and goes through sample receiving, analysis, storage, and reporting. Then to complete our mission, our QA results must be compared to the general contractor results. If deviations from normal experimental error occur, we must be in a position to defend our results as correct. The QC becomes very important. Working toward this goal, the Missouri River Division (MRD) has generated audit trails as set forth in the CLP protocols. In my area of inorganic analysis we have incorporated both the SW-846 and the CLP QC package into our standard operating procedures.

Having established the need for QC, let's look at what the Environmental Protection Agency (EPA) considers good QC. The latest CLP documentation is dated January 1990. This document will list what this program considers minimal QC for metals. This includes instrument calibration, initial calibration verification, initial calibration blank, continuing calibration blank, preparation blank, interference check sample for ICP, spike sample analysis, duplicate sample analysis, laboratory control sample analysis, ICP serial dilution analysis, detection limit determinations, inter-element corrections for ICP, and post-digestion spikes for AA. Post-digestion spikes in our lab are essential for selenium by furnace AA to verify matrix interferences. Unfortunately we do not have Zeeman background correction on our AA. Most of the QC requirements mentioned here are also in SW-846.

We at MRD basically require the reporting information in SW-846 from our contractors. The sample numbers are listed on the first page, followed by the inorganic analysis data sheets, duplicate results with calculated relative percent differences, spiked sample results with recoveries, initial and continuing calibration verification standards with their recoveries, and the data from the blank samples. In the future when we get our computer data system completely up and running we will probably require more information. If you have a QA lab under contract, just because they have a good reputation and are supposed to be good, this doesn't mean that you are always going to get good data. We have found a couple of problems with our contract lab for metals. One of them occurred when the instrument they were using could only do one background correction on one side of the peak for each run. They had an interference in the cadmium line so they just turned the background correction off. We analyzed some of their samples and this uncovered a problem because the limit for this site was

25 ppm for cadmium. They were finding over that and we were finding under. We found that they had turned the background corrector off and this had raised the background enough to give values over the limit. Well, this could cost the Corps a lot of money for extra cleanup. This is just an illustration to show that we have to watch everybody including ourselves. We make mistakes, too. I've caught errors several times where standards were off by maybe a factor of 10 and as I go on through this talk, you will see how you can do things to catch your errors.

I'm going to discuss why all of these QC checks are needed. The first is the initial and continuing calibration check. The first is to be sure the instrument is calibrated correctly initially and the second is to assure that no drift has occurred throughout the analysis run. The CLP has set limits for all of these defining allowable variations.

The next QC check is for blanks. This is needed to check instrument drift and also to report method blanks to check for contamination during analysis.

The ICP interference standard is reported to check for several potential problems. It checks to be sure that all background correction points and spectral overlap corrections are set properly. This interference check is essential for ICP instruments operating in the simultaneous mode (Table 1). Note the addition of titanium to the list of interfering elements even though this element is not in the list of CLP metals. For all of the elements in the interference samples, corrections are calculated and entered into the ICP computer. If a significant amount of interference is found in the sample and all of the lines are turned on, then the computer corrects based on the amount found. Note that titanium produces interferences even though it is not on the list of metals usually analyzed. This interference is frequently encountered in soil samples. The interferences will be different for every instrument so everyone has to run their own checks.

QUESTION: Have you created a table of interferences for your instrument?

MR. SHANNON: For the Leeman instrument that we have operating in the sequential mode, we can pick out lines without interferences, although we may lose some sensitivity when we select an alternate line.

The ICP requires a skilled interpreter to produce good data because of all the interferences that can occur and the analyst must be aware of these possibilities. Many spectral overlaps can and do occur. For example, high levels of vanadium will produce high levels of beryllium and high levels of chromium will interfere with antimony. I might point out that for water samples, high levels of chromium, nickel, manganese, titanium, and vanadium are rare.

Choosing the proper background position is very important. It may be necessary to choose two points if the slope is significant from one side of the peak to the other.

Another QC check is matrix spike analysis. This helps us determine if there are matrix effects and if there are any digestion effects. Some labs don't like to do matrix spikes because they don't get very good recoveries. I rely on the limits that CLP has set to help me determine how good my digestions are.

Table 1
Example of Analyte Concentration Equivalents (mg/L) Arising from Interferents at the 100-mg/L Level

Analyte	Wavelength nm	Interferent									
		Al	Ca	Cr	Cu	Fe	Mg	Mn	Ni	Ti	V
Aluminum	308.215	--	--	--	--	--	--	0.21	--	--	1.4
Antimony	206.833	0.47	--	2.9	--	0.08	--	--	--	.25	0.45
Arsenic	193.696	1.3	--	0.44	--	--	--	--	--	--	1.1
Barium	455.403	--	--	--	--	--	--	--	--	--	--
Beryllium	313.042	--	--	--	--	--	--	--	--	0.04	0.05
Boron	219.773	0.04	--	--	--	0.32	--	--	--	--	--
Cadmium	226.502	--	--	--	--	0.03	--	--	0.02	--	--
Calcium	317.933	--	--	0.08	--	0.01	0.01	0.04	--	0.03	0.03
Chromium	267.716	--	--	--	--	0.003	--	0.04	--	--	0.04
Cobalt	228.616	--	--	0.03	--	0.005	--	--	0.03	0.15	--
Copper	324.754	--	--	--	--	0.003	--	--	--	0.05	0.02
Iron	259.940	--	--	--	--	--	--	0.12	--	--	--
Lead	220.353	0.17	--	--	--	--	--	--	--	--	--
Magnesium	279.079	--	0.02	0.11	--	0.13	--	0.25	--	0.07	0.12
Manganese	257.610	0.005	--	0.01	--	0.002	0.002	--	--	--	--
Molybdenum	202.030	0.05	--	--	--	0.03	--	--	--	--	--
Nickel	231.604	--	--	--	--	--	--	--	--	--	--
Selenium	196.026	0.23	--	--	--	0.09	--	--	--	--	--
Silicon	288.158	--	--	0.07	--	--	--	--	--	--	0.01
Sodium	588.995	--	--	--	--	--	--	--	--	0.08	--
Thallium	190.864	0.30	--	--	--	--	--	--	--	--	--
Vanadium	292.402	--	--	0.05	--	0.005	--	--	--	0.02	--
Zinc	213.856	--	--	--	0.14	--	--	--	0.29	--	--

MS. STRONG: What kind of limits have they set for known soil samples such as the NIST standard reference materials?

MR. SHANNON: I have no idea.

MS. STRONG: This is something that needs to be investigated. The values that NIST reports are values that would be obtained from a complete digestion and not from the mild digestion used in CLP or SW-846.

The next QC check is duplicate sample analysis. This is important in determining your precision. How well can you repeat yourself? Here again, EPA sets limits in their CLP protocol which we pretty much adhere to.

The laboratory control sample is another QC check. This is a sample a lot of people like to use instead of a matrix spike. The control sample is going to tell you a couple of things. First, the control has been digested just like the rest of your samples and this will tell you how well you did your digestion. For example, if you heat your sample too hot, you're going to lose antimony. This will show up in your control. Silver is another bad actor and conditions have to be just right to obtain good results. For solid samples you need to obtain a very homogenous control sample and analyze it a number of times to obtain your standard deviation. Then you use this control sample every time you digest samples and apply the limits that you have established. Then we have standard addition results. This is another way of checking for interferences. This will help eliminate matrix problems. We do a lot of standard additions in our lab, especially if it is a really critical project. I will do a standard addition on each sample type just to prove that there are no matrix effects. The ICP serial dilution does the same thing as standard additions. If the sample contains a high enough level of the analyte, dilute by a factor of five and the result should be comparable to the original data if there are no interferences. If you don't, then you suspect a matrix problem.

Another consideration is the linear range of concentration. On the ICP, the manufacturer will give you all kinds of numbers for the linear range. You need to experimentally determine the range for your instrument for each analyte of interest. Samples should all be run within the linear range of the instrument, either by diluting samples or running different calibration curves.

EPA only requires running the interference check samples once each year. I think they should be run more often. I find that very small changes in the slit position, or very small changes in the flow rate and power to the plasma can cause major differences in emissions of ions and atomic lines. If you can't turn your instrument on and get exactly the same conditions every time, those corrections are not going to be valid. There was a suggestion in one of our reference books that said that if you monitor the ratio between the copper 324.75-nm atomic line and the manganese 257.61-nm ion line and keep them the same, then you should be OK.

Now we'll discuss instrument detection limits. The EPA uses the table given here for ICP. This is something that we need to check for all our instruments. As they age and optics and electronics deteriorate, they lose sensitivity and detection limits go up.

EPA recommends a quarterly check. EPA also recommends the use of a contract-required detection limit standard to keep tabs on detection limits. This sample is about twice the detection limits and gives you an idea of how well you are doing at the low end of the concentration range.

I'd like to point out that EPA is a good source for limited quantities of standards and check samples. You can use these to compare your standards that you have obtained from a commercial source.

As Ann pointed out, the values that are given for the NIST sediment sample are for a total destruction digest. Fisher Scientific now offers a standard soil with value limits for Method 3050 digest. I have ordered the sample, but I have not yet received it.

QUESTION: How often do you prepare your diluted calibration standards?

MR. SHANNON: About every 2 weeks. Another problem that I would like to point out is related to exceeding the linearity range. For example, if you have a sample that reads 2,000 ppm iron, this value exceeds the linearity of the calibration curve. It may be 2,000 or it may be 10,000. If you use your computer correction, it's going to be wrong. You either have to dilute the sample within linear range or pick a less sensitive line.

MS. STRONG: This is the reason that the ICP is so good for clean water samples, but contaminated sediments and soils with their many matrix interferences can really present problems.

CORPS DIVISION LABORATORIES AS GENERATORS OF HAZARDOUS WASTE

Mr. Kevin Coats
Missouri River Division, Chemical Review

The topic of my talk is how Division Labs can be generators of hazardous waste and how the Resource Conservation and Recovery Act (RCRA) regulations apply to us. We are not immune to regulations. The Missouri River Division (MRD) has formed an RCRA compliance steering committee and a lot of the things I'm presenting here are the result of that committee. We have not formulated our method-specific Standard Operating Procedures (SOPs) yet or written our master plan, but we do have the framework in place and we're moving toward that.

First I'd like to discuss a little bit about the history of RCRA. It was passed by Congress in 1976. In 1980 regulations were issued for generators of greater than 1,000 kg per month of hazardous waste by definition. So in 1980 we were mainly looking at large generators. Small quantity generators were generally exempt. That was seen as somewhat of a loophole and in 1984, the Hazardous and Solid Waste Amendments (HSWA) to RCRA were passed to cover generators of 100 to 1,000 kg/month. The HSWA amendments became effective in September of 1986 and at that point many testing labs were brought into the system. At that time there was a lot of scrambling around to try to comply with the regulations.

To talk about hazardous waste, first we have to talk about the definition of solid waste because something cannot be a hazardous waste unless it is a defined solid waste. The classic definition for solid waste when RCRA was first written was garbage, refuse, or sludge no matter how it was handled. Certain other wastes were defined as solid wastes only if they were discarded. In 1985 they moved to close that loophole and defined quite a few recycling activities and recyclable materials as solid waste. Some of these materials are such things as spent materials which have become too contaminated to serve their intended usage, by-products, sludges, commercial chemical products, and scrap metals. Some of the recycling activities that were brought into the system were classified as "use constituting disposal" which would include land application, burning for energy recovery, reclamation, and the accumulation of materials that would eventually be recycled. The later definition of solid waste brought a lot of things into the system that were not there before.

Now that we have defined solid waste, we can go on and define hazardous waste. There are two ways that something can be a hazardous waste - (a) either it can be hazardous because it is a list waste or (b) it can be hazardous because it is a characteristic waste. Some of you who work in the lab are familiar with these characteristic waste tests that are run to make these determinations. The list wastes (F, K, P and U) are included in 40 (CFR) parts 261.31 - .33. The F list includes things from non-specific sources. The K list includes items from specific sources, the P list is acutely hazardous commercial chemical products and off-specification species, container residues and

spill residues, and the U list is toxic commercial chemical products. Usually the F and K lists get lumped together and the P and U lists get lumped together.

I'm going to point out some examples of the things that you will find on these lists to illustrate what they are. The F list encompasses such things as spent halogenated solvents including carbon tetrachloride, trichloroethene, and methylene chloride, and non-halogenated solvents such as xylene, acetone, benzene, and ethyl acetate. On the same list you will find the Environmental Protection Agency (EPA) hazardous waste number. This number is used in the yearly reporting of hazardous waste. In addition there is also a hazard code on this list which indicates the reason the material was listed: It was ignitable, reactive, corrosive, or EP toxic.

If you go to the K list you will find things like distillation bottom tars from the production of phenol, acetone, and aniline. The K list probably has the least application to things that we do in the Corps labs. Going to the P list you will see what the EPA considers acutely hazardous waste. Some things listed on there that are kind of interesting are such things as cyanides, arsenicals, quite a few pesticides and herbicides, nitroglycerin, and things like that.

From there you go on to the U list and you'll see what they consider lesser toxic things, but still hazardous enough to be listed - such things as acetone, benzene, butyl alcohol, and creosote, to name a few. One of the main things to note about these lists is that with very few exceptions, there are no quantities listed. If those things are in the environment or in your material at all, they are going to be hazardous. As opposed to the characteristic test, quantity is not important. If it's there, it's hazardous.

Next, I want to talk a little bit about the definitions of characteristic wastes. Some parts of the definition need to be tested in the laboratory. Others are determined by inspection. For example, ignitability can be tested in a closed cup tester. Anything with a flashpoint less than 140° F is considered ignitable and some other things like knowledge of the material. Anything that is an oxidizer like chlorate, permanganate, inorganic peroxide, or nitrate if it supplies a source of oxygen - that's considered ignitable. Anything that's non-liquid and causes fire at standard temperature and pressure is ignitable. One notable exception is that any aqueous solution of ethyl alcohol less than 24 percent is not ignitable by definition. This is to exclude distilled spirits. Corrosivity basically has a testing type definition. Either it's aqueous and has a pH lower than 3.2 or greater than 12.5 or it's liquid and corrodes steel at a certain rate. Reactivity has eight properties that are listed and it is done by inspection. There is one test where you can check for the evolution of cyanide or sulfide at a certain pH. Otherwise, it's things like reacting violently with water or it's capable of explosive decomposition or several other factors. The last and probably the most complicated characteristic is the EP toxicity characteristic. This is basically a leaching type procedure followed by analysis of the leachate for eight metals, four pesticides, and two herbicides that have MCLs established for them.

QUESTION: Do you check for the volatiles?

MR. COATS: That's in the TCLP that will supersede the EP procedure very soon. EPA says it's designed to refine and broaden the scope of the hazardous waste program. I guess that's one way of saying that it's going to stick a lot of generators with having a lot more hazardous waste. I think that's the reason that it took so long to become effective, because the cost to industry is formidable and they are quite worried about that. TCLP replaces a single leaching procedure with a dual workup - with a zero-headspace analysis for volatile organics and liquid extraction for the other compounds. It's a lot more complicated and has a lot more testing on the back end of the procedure. It adds 25 organic compounds to the list and establishes MCLs for those organics. The final rule differs from the draft in that the final rule has fewer organics. There are some other differences that I won't go into here.

QUESTION: Does the rule defend the analysis of every single parameter or does it allow the administrator and the states some leeway?

MR.COATS: I think it's more like the Appendix VIII list for groundwater monitoring at Treatment Storage and Disposal (TSD) facilities where you run those things that you would reasonably expect to be there based on the activities that took place at the facility. I think that if you have a sample come in with no volatiles in it that surely they would not expect you to run a zero-headspace TCLP analysis. This is going to increase the cost from about $500 for an EP toxicity test to well up over $1,000 for the TCLP. There are some compliance dates in there. Large quantity generators have to implement this by September 1990 and small quantity generators by March 29, 1991. But in the interim they suggest that you start running your wastes both ways to see if you can build up some comparison between the two.

This is kind of a logic tree to determine if a solid waste is hazardous (Figure 1).

As with all laws, rules, and regulations, there are going to be some loopholes. Some of them were intended, some of them were there and are no longer there. For the definition of a solid waste, they specifically exclude domestic sewerage and mixtures and other wastes that pass through the sewerage system. So you can put hazardous waste down the sewer as long as you don't exceed effluent limits of the municipal sewer system. There is a big study going on now to study the effects of this loophole. The other thing that is excluded is a point source discharge that is regulated under the Clean Water Act.

Other exclusions from hazardous waste include any chemical product that is going to be reclaimed. Also any fertilizers or pesticides that can be land applied should never have to be disposed of as hazardous waste.

Some of the things that might show up in the Division labs as hazardous wastes are unused samples. The criteria for having these things designated as hazardous waste are either they are contaminated soils or water from spills of P or U list waste or they could also be brought into the system by the "derived from" or "contained in" rule. The "derived from" rule includes any solid waste that is generated from the treatment, storage, or disposal of hazardous waste and is still hazardous even if it is not a characteristic waste.

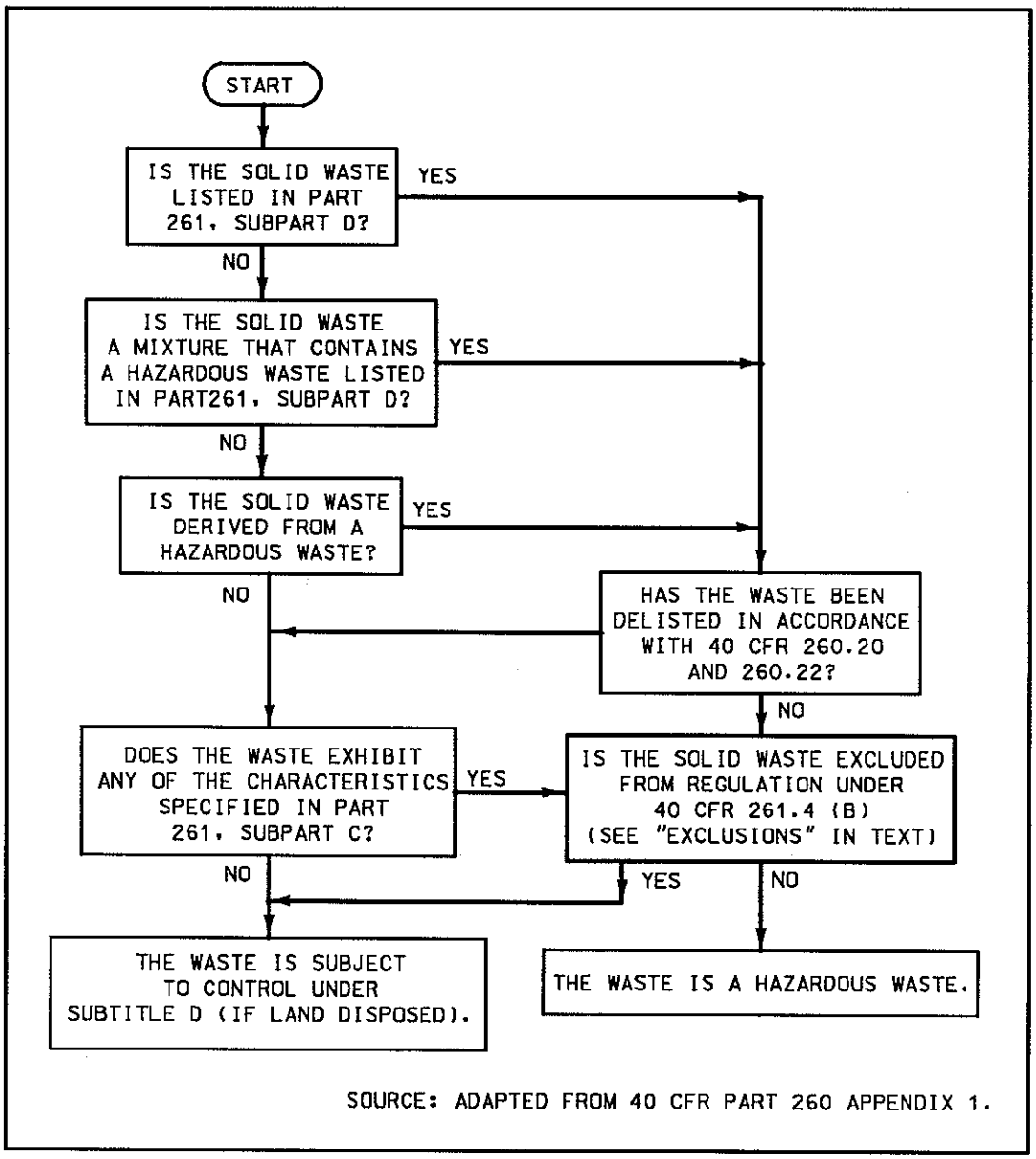

Figure 1. Logic diagram for identifying hazardous wastes

The "contained in" rule states that F or K wastes that are spilled into the groundwater or soil, regardless of whether they test characteristic, are still listed as hazardous.

Other laboratory-generated hazardous waste might be commercial chemical products such as outdated chemical reagents, spent solvents (unless you are planning to recycle them on site), standards that are put together for spiking or calibration purposes, and treatment system residues.

We'll now discuss the categories of hazardous waste generators. There are conditionally exempt small-quantity generators that produce less than 100 kg of hazardous waste each month or less than 1 kg of acutely hazardous waste each month. They are required to identify their waste and send it to a permitted TSD facility and never accumulate greater than 1,000 kg of hazardous waste. The second category is the small-quantity generator that generates between 100 and 1,000 kg of hazardous waste each month and less than 1 kg of acutely hazardous waste each month. The small-quantity generator is required to comply with the rules set forth in the 1986 HSWA regulations. The third class of generator is the large-quantity generator that produces greater than 1,000 kg of hazardous waste each month and/or greater than 1 kg of acutely hazardous waste each month. The large-quantity generator is required to comply with all hazardous waste management rules. Every state has the authority to implement their own RCRA program as long as their regulations are at least as stringent as those set forth by EPA.

What we have run into at MRD is that we were trying to qualify as a conditionally exempt small-quantity generator, but the state of Nebraska has tightened the rules to allow the accumulation of no more than 100 kg of hazardous waste. So it's doubtful that MRD can qualify for that category.

I'm going to assume that most Corps laboratories will be small-quantity generators, so the rest of my talk will be geared toward that. As a small quantity generator, you have to acquire an EPA identification number, develop good on-site waste management, find a transporter and TSD that is in compliance, and make an annual report of activities. The information for preparing lab packs is in 40 CFR 265.316. It tells you how much sorbent material you have to put in the packs, etc. A small quantity generator can accumulate up to 6,000 kg total for 180 days or for 270 days if the TSD is more than 200 miles from the facility. They are overly generous because a large quantity generator can only store for 90 days. Drums and tanks are the appropriate storage vessels for these things. We have to mark the containers as hazardous waste and check their condition regularly. If you are going to treat hazardous waste onsite you have to do it within 180 or 270 days and if you can't meet the requirements for time and quantities, you have to go out and get a permit. They are costly and time-consuming. The process to obtain a permit may take up to 2 years.

Another aspect of managing hazardous waste onsite is accident prevention. Some common sense precautions are to reduce the possibility of fire, explosion, or release, maintain proper fire equipment, and contact local authorities so they know the types of materials and wastes that you have onsite. Have procedures for managing the wastes written up as SOPs.

When we first set up our RCRA steering committee at MRD, our lawyer types said we should try to operate under the lab exclusion policy (40 CFR 261.4 (d)). This policy applies to potentially hazardous samples for geotechnical and chemistry testing and says that if you are going to get these samples and turn around and send them back to the sample collector, then at no time are they considered hazardous waste. It sounds like a great deal and the Office of Counsel thought it was great because there was no liability involved and they couldn't find a bad thing about it. However, your customers will think all kinds of bad things about it because they don't want their samples back and on these FUDS sites, you don't necessarily have a place to take the samples back to. So it's an interesting concept and we are exploring the use of it when we can. I want to point out that you can apply it selectively, you can do it on a sample by sample basis. By selectively exercising this exclusion, you can keep your quantities down.

Another regulation I want to point out is about treatability studies (40 CFR Part 261.4 (f)). The original concept was that you had to have a permitted facility to run treatability studies. This concept has been cleared up and now if you want to run treatability studies, there are some specific requirements that you have to comply with. The main one is that you have to have an EPA identification number.

QUESTION: If you get a soil sample in and you analyze it and don't find any waste material in it, is it considered a toxic waste just because it was a sample?

MR. COATS: No, as long as you don't find anything, then it can be disposed of through normal channels.

I'd now like to discuss how we as a lab can achieve RCRA compliance. There are three things that I think are of particular importance. We need to create a master plan and general SOPs for hazardous waste management. We can define some process-specific SOPs that will eventually be put into the methods themselves and we need to consider waste minimization which will reduce the amount of waste and result in cost savings. The master plan and general SOPs should include the following:

a. Optimum waste disposal scenario.

b. Generator status.

c. Accumulation totals (hazardous and acute).

d. Accumulation times.

e. Waste-tracking records.

f. Contracting.

g. Emergency planning.

h. Criteria for samples.

i. Waste management organization.

j. Audits.

k. Plan updates.

Some of the ways that we can minimize our RCRA waste are: recycling, elementary neutralization, volume/weight minimization, limitation of sample volumes, limitation of reagents and standards according to needs, use of the lab exclusion, substitution of non-hazardous for hazardous materials, and segregation of hazardous from non-hazardous waste.

Some other regulations that you have to consider are your municipal codes (sewage effluent limits), state codes (air), and OSHA.

One of the lessons that we have learned is that contractors can and do misclassify waste, so you need to practice very rigid contractor oversight. Look over their shoulders, check all the manifests.

To summarize, RCRA is a fact of life - it's here to stay. There are penalties that can be invoked for violators. The regulations are complicated and confusing. For information, there is an RCRA hot line where you can get some interesting interpretations. We should take a planned approach to the problem by writing good SOPs and be sure that we have the staff to comply. We need good communications with the regulators and we should foster Corps cooperation and exchange information on this topic.

INTERLABORATORY TESTING PROGRAM

Ms. Ann Strong
US Army Engineer Waterways Experiment Station

In February we sent out notification to Corps Division and Research Labs scheduling the initiation of samples to be submitted for the Interlaboratory Testing Program. Samples to be included were water samples at two levels for ammonia and nitrate, water samples for polychlorinated biphenyls at two levels, a water sample for RCRA metals, a water sample for priority pollutant metals plus barium and a sediment sample for priority pollutant metals plus barium. The seven Division labs and WES participated in the program. Sufficient sample was provided for duplicate analysis of each set of samples. Labs were instructed to prepare blank spikes with each sample set and to report this data together with their sample results. The sample results that we received are summarized in the Tables 1-7. No interpretation of results has been made at this time because I only received the last of the data last week. The data were not as good as I had hoped. Maybe after the labs have had a chance to check their results we'll have some plausible explanations. Some extreme values that I might mention are the antimony in sediment where a couple of the labs encountered some obvious matrix interferences that were not accounted for. There were some other values reported that I think were calculation errors or dilution errors. I will make my final data evaluation after I hear from the participating labs.

DR. KORAN: Basically I'm concerned about who certifies laboratories. For hazardous and toxic waste (HTW) work, the procedure is spelled out and gives that responsibility to Missouri River Division (MRD). The Engineer Regulation (ER) that authorizes this program requires the Division laboratories to participate. But I'm concerned that there is no certification program for water quality labs.

DR. DAVIES: Doesn't ER 8100 state the laboratories that are certified for water quality? Although I don't know how they got that way.

MS. STRONG: If that were the case, there would only be two or three labs doing water quality work. That ER was written in 1976 and although it has had appendixes added, it has not been revised. Lab certification for water quality is certainly something that many of our Divisions and Districts are concerned about and maybe this is something that needs to addressed by the Water Quality Committee. We at WES will certainly be glad to work with them to accomplish this.

DR. DAVIES: Don't you often run into state requirements for certification for water quality work?

DR. KORAN: Yes, that's true.

COMMENT: Can't we use Environmental Protection Agency (EPA) certification?

MS. STRONG: EPA does not certify water quality labs, their only certification program is for drinking water. Some states do have their own certification programs, however.

MR. GOUDA: What about the CLP?

MS. STRONG: The CLP is not a certification program, it is a contract program set up to handle Superfund work.

Table 1
Interlaboratory Testing Program
Priority Pollutants Metals + Barium in Water
mg/L

True Value (Range)	Lab 1	Lab 2	Lab 3	Lab 4	Lab 5	Lab 6	Lab 7	Lab 8
0.156	0.141	0.135	0.160	0.106	0.143		0.194	0.17
Sb (0.117-0.195)	0.151	0.136	0.157	0.118	0.161			0.19
0.087	0.084	0.082	0.071	0.073	0.084	0.062	0.071	0.085
As (0.065-0.109)	0.084		0.072	0.075	0.075	0.062	0.068	0.084
0.076	0.091	0.078	0.080	0.052	0.073	0.078	0.068	0.073
Ba (0.057-0.95)	0.082	0.078	0.077	0.048	0.073	0.07		0.072
0.045	0.419	0.041	0.033	0.036	0.046	0.054	0.045	0.043
Be (0.034-0.056)	0.431	0.042	0.035	0.037	0.043	0.053		0.043
0.147	0.122	0.129	0.155	0.126	0.138	0.17	0.156	0.161
Cd (0.110-0.184)	0.127	0.195	0.158	0.126	0.140	0.20	0.160	0.157
0.285	0.020	0.195	0.201	0.217	0.224	0.24	0.236	0.238
Cr (0.176-0.294)	0.020	0.195	0.216	0.220	0.230	0.29		0.228
0.462	0.359	0.416	0.381	0.374	0.408	0.51	0.410	0.448
Cu (0.346-0.578)	0.326	0.412	0.383	0.362	0.394	0.59		0.440
0.078	0.070	0.073	0.075	0.059	0.065	ND	0.078	0.088
Pb (0.058-0.098)	0.070	0.074	0.076	0.058	0.073	ND	0.074	0.085
0.0065	0.0027	0.0060	0.0069	0.0054	0.0053	0.0052	0.006	0.0075
Hg (0.0048-0.0081)	0.0032	0.0067	0.0069	0.0055	0.0047	0.0057	0.007	0.0075
0.110	0.113	0.106	0.119	0.086	0.105	0.16	0.117	0.06
Ni (0.082-0.138)	0.106	0.107	0.117	0.090	0.106	0.16		0.05
0.039	0.036	0.034	0.039	0.036	0.038	0.065	0.029	0.042
Se (0.029-0.048)	0.036	0.037	0.040	0.036	0.036	0.067	0.030	0.042
0.012	0.007	0.010	0.010	0.006	<.010	ND	0.009	0.005
Ag (0.006-0.014)	0.006	0.010	0.010	0.006	<.010	ND	0.008	0.005
0.028	0.019	<0.001	0.031	0.018	<.050	ND		0.021
T (0.020-0.035)	0.020	<0.001	0.032	0.012	<.050	ND		0.019
0.259	0.162	0.252	0.232	0.204	0.248	0.27	0.282	0.283
Zn (0.194-0.324)	0.159	0.242	0.237	0.194	0.244	0.29		0.279

Table 2
RCRA Metals
Water
mg/L

True Value (Range)	Lab 1	Lab 2	Lab 3	Lab 4	Lab 5	Lab 6	Lab 7	Lab 8
0.500	0.447	0.487	0.430	0.435	0.488	0.441	0.409	0.480
As (0.351-0.643)	0.460	0.487	0.421	0.422	0.488	0.442	0.427	0.471
10.1	12.3	10.1	8.91	9.62	10.8	9.10	9.25	10.1
Ba (7.65-11.9)	13.0	10.1	8.72	10.4	10.5	9.11	9.30	9.8
0.100	0.090	0.104	0.098	0.089	0.107	0.112	0.093	0.11
Cd (0.090-0.110)	0.085	0.098	0.101	0.086	0.109	0.142	0.089	0.11
0.500	0.443	0.485	0.486	0.415	0.460	0.545	0.583	0.51
Cr (0.418-0.594)	0.444	0.482	0.481	0.475	0.482	0.574	0.604	0.51
0.500	0.466	0.513	0.470	0.417	0.490	ND	0.500	0.861
Pb (0.420-0.604)	0.485	0.525	0.460	0.409	0.494	ND	0.550	0.860
0.020	0.0071	0.016	0.025	0.017	0.0144	0.017	0.017	0.0190
Hg (0.008-0.026)	0.0076	0.014	0.022	0.019	0.0142	0.020	0.016	0.0190
0.099	0.083	0.086	0.096	0.078	0.073	0.112	0.065	0.106
Se (0.064-0.125)	0.088	0.088	0.095	0.078	0.042	0.120	0.065	0.099
0.500	0.462	0.444	0.477	0.461	0.498	0.501	0.420	0.58
Ag (0.439-0.555)	0.459	0.462	0.477	0.454	0.490	0.531	0.429	0.55

Table 3
Interlaboratory Testing Program
Nutrients - 1
Water (mg/L)

True Value (Range)	Lab 1	Lab 2	Lab 3	Lab 4	Lab 5	Lab 6	Lab 7	Lab 8
13.2	10.7	13.0	13.2	NA	12.0	NA	17.6	NA
NH4 (11.5-14.9)8	10.7	12.9	13.6	NA	11.5		16.8	
5.6	6.8	4.72	3.15	NA	4.94	NA	5.2	NA
NO3 (4.8-6.2)	--	4.88	3.05	NA	4.89		5.1	

Table 4
Interlaboratory Testing Program
Nutrients - 2
Water (mg/L)

True Value (Range)	Lab 1	Lab 2	Lab 3	Lab 4	Lab 5	Lab 6	Lab 7	Lab 8
2.0	1.8	1.80	2.12	NA	0.99	NA	1.5	NA
NH4 (1.66-2.30)	--		2.23		1.22		1.6	
2.0	2.6	1.94	1.24	NA	1.92	NA	1.7	NA
NO3 (1.71-2.27)	2.4	1.93	1.21		1.82		1.8	

Table 5
Interlaboratory Testing Program
PCB - 1
Water (mg/L)

True Value Range	Lab 1	Lab 2	Lab 3	Lab 4	Lab 5	Lab 6	Lab 7	Lab 8
1PCB-1254	21	25	NA	20	45	15	20	33
30 (15-45)	29	27	NA	17	43		21	35

Table 6
Interlaboratory Testing Program
PCB - 2
Water (mg/L)

True Value Range	Lab 1	Lab 2	Lab 3	Lab 4	Lab 5	Lab 6	Lab 7	Lab 8
PCB-1248	49	46	NA	31	83*	31.8*	38	24
50 (30-70)	49	30	NA	29	87		42	20

* Identified as PCB-1242.

Table 7
Interlaboratory Testing Program
Priority Pollutant Metals + Barium
Sediment (mg/kg)

	True Value Range	Lab 1	Lab 2	Lab 3	Lab 4	Lab 5	Lab 6	Lab 7	Lab 8
	(0.5-7)	7.5	0.6	0.685	0.011	<50	2.2	134	229
Sb		5.6	0.6	0.639	0.011	<50	3.7	136	229
	(20-66)	36.3	32.0	33.0	27.2	46.3	47	51	25.8
As		37.6	31.0	34.6	28.4	55.9	40	48	21.4
	(130-176)	420	150	167	0.128	155	140	151	165
Ba		363	150	152	0.129	160	152	149	154
	(1-9)	1.13	9.0	1.00	0.002	<2	ND	1.5	1.0
Be		1.15	9.4	0.90	0.002	<2	ND	1.5	0.8
	(13-29)	19.5	13.6	17.1	0.043	15	33	15	29
Cd		22.8	13.5	16.9	0.042	15	29	14	31
	(440-680)	542	523	1036	0.503	678	590	682	691
Cr		548	658	1039	0.506	663	579	628	653
	(247-307)	208	272	302	0.295	282	280	271	278
Cu		208	278	306	0.292	282	281	271	263
	(680-920)	712	776	784	0.834	716	740	829	742
Pb		716	770	790	1.173	728	739	829	706
	(0.5-1.9)	1.27	1.43	1.65	0.504	<0.03	1.1	1.3	0.95
Hg		1.11	1.65	1.68	0.371	<0.03	1.7	1.3	0.88
	(80-240)	111	191	247	0.120	247	190	230	244
Ni		119	206	243	0.120	252	210	201	235
	(1-7)	<0.2	1.10	2.74	0.945	<0.2	ND	0.5	2.6
Se		<0.2	1.10	2.75	0.893	<0.2	ND	0.4	2.4
	(1-7)	4.10	2.4	4.21	0.0041	<10	ND	3.5	NA
Ag		3.91	2.4	4.33	0.0045	<10	ND	2.9	
	(1-7)	2.49	3.6	6.9	0.010	<50	ND	NA	0.7
Tl		2.62	3.7	6.2	0.009	<50	ND		0.6
	(3,400-4,400)	3240	3730	4306	3.364	3811	4200	3780	3641
Zn		3040	4000	4286	5.883	3809	4231	3552	3434

Laboratory Fraud

Mr. Marty Stutz
US Army Toxic and Hazardous Materials Agency

Laboratory fraud, it's a subject that is near and dear to the hearts of a number of agencies including the Department of Defense, Department of Energy, and Environmental Protection Agency (EPA). What is fraud? What is being considered as fraud? Basically it is any manipulation that is performed by a laboratory or laboratory personnel to change the results to meet a requirement, whether it's a technical requirement or a contractual requirement. There are two distinct types of fraud, generally. Contractual, and I think this is the one that EPA is most involved with and the number of cases that they have brought to bear. It's what they call time travel. You have a contract that says you will do an analysis in 45 days. If you do it in less than 45 days you get a 10-percent premium. Laboratories have been reporting that they have been doing the analysis in under 45 days when they actually performed the analysis in 50 days or longer. So that's contractual fraud.

Then there's technical fraud where they've done some manipulation with the data to meet some requisite in the program. And I'm going to show you some examples today. These are examples that in themselves are not necessarily examples of fraud, but they could be indications of something being done to manipulate. Looking at the data packages that are provided with the results, note the injection date. It's 88/1/16. The last calibration date is 88/1/18, two days after the sample injection. Another example, again, injection on 88/1/16 actually run 45 min before the previous sample. The last calibration date listed for this sample is 87/10/30. I'm not saying that there was anything wrong, but it raises questions. Again this is an example of an analysis that was done on January 15, 1988 and the last calibration was performed October 30, 1987. I think that you will recall that the procedures call for calibration daily or initial calibration at a much closer interval than the couple of months that this shows. So, again this is an apparent choosing of a calibration curve so that criteria could be met. Here is another example where the analysis apparently was January 15 and the calibration was January 18. Looking at another example, there is a qualifier on "M" on the data indicating that a manual integration was performed for the n-Nitrosodiphenylamine. So, we take a look at the manual integration and see that they have drawn an arbitrary baseline so as to change the integration so that the area of this peak will meet criteria.

DR. HEITKE: So that was the standard run?

MR. STUTZ: Yes.

QUESTION: Do you normally get all of the raw data?

MR. STUTZ: Yes, we require all of the raw data for our program.

COMMENT: Then they obviously don't expect anyone to look at it.

MR. STUTZ: That's correct, and in fact we can't possibly look at all of the raw data. So what we do is, we look at a percentage. Once it gets into our offices we look

at a specified percentage. The percentage is going to change depending on whether we've seen any trouble or have an inkling of any trouble. If you pull something at random and find a problem, then you go back and look at everything. This is the way this came about. We got wind of some problems, we had some concerns, so we pulled the data and started looking at it. Again, this is an indication of manual integration. Now occasionally you're going to have to do a manual integration because there is something wrong, but you should not see it for every chromatogram. Again, this may not be an indication of fraud, but it's something that you need to look at to have a better feel for what the laboratory is doing. Here is another compound where they abitrarily drew the baseline for the standard.

MR. GOUDA: Did they have a reason for doing this other than trying to manipulate the data?

MR. STUTZ: No, there is no acceptable reason. The point is that the procedure calls for running a single calibration standard on the day that you do your analysis. If all the calibration points are acceptable, then you run your samples. If they are not acceptable, then you have to go through and redo the full initial calibration and that takes 6 to 8 hours. So what they have done here is draw the baselines so that the calibrations will be acceptable and in the process they have saved 6 to 8 hours of run time. Again, this is not to say that there was anything wrong, necessarily, but the printout for any specific sample usually shows the header and the points within the same minute or very close to each other. In this case the points were timed at 9:56 and the header at 1:49. A big difference in time. Maybe there's an explainable reason, maybe there isn't. Data like these presented without explanation are a point of question.

DR. HEITKE: Are you saying that the header was from a different run?

MR. STUTZ: I'm saying that at this point I have no idea what happened. Only that there is a gap in time between the header and the data points and they have not flagged the data in any way to indicate a problem. It gives you grounds to go back to the laboratory and ask for an explanation. These are just a few examples of questionable data from one lab and point out why you need to look at the raw data. As it turns out in this case, the changes made by manual manipulation were insignificant. A surrogate recovery was lowered by 3 percent so it met criteria and it did not have a tremendous impact on the analytical data, but that's not something that you're going to know until you look into it. It could have an impact on the data. I just wanted to point out some of the things that could happen when a lab thinks it can get away with something.

COMMENT: We frequently make a second printout of the data at a later time, so the header time will be different.

MR. STUTZ: Yes, but in this case there was no explanation.

DR. SVIRBELY: That is the reason you need to keep very detailed instrument log books so that any type of discrepancy can be explained.

MR. STUTZ: That's true, but in these cases here, there was no documentation. That is why I say that although this in itself is not proof of fraud, it indicates the potential for fraud and indicates a problem that needs to be looked into in greater detail.

COMMENT: So, you look for a pattern?

MR. STUTZ: You look for a pattern, you look for anomalies. Why would you expect to see manual integration every day? Why would you expect to see manual integration every day only on the surrogates? It just points out that you need to look a little closer at what the laboratories provide you.

QUESTION: How do you deal with labs that provide data that you question?

MR. STUTZ: There are a number of ways. The laboratory can be de-certified from doing work for you. If you have adequate proof and the lab is under contract to you, you have the ability to terminate that contract. Now if there is very little impact of what they've done and you don't want to make a big fuss about it, you can terminate for convenience of the government. They can also be terminated for default if they have missing data, missed holding times, or things like that. At this point with regard to this laboratory the decision is with the procurement fraud division whether to terminate for default or go for punitive damages.

QUESTION: How would I know if a lab I was interested in had been terminated by you?

MR. STUTZ: If it was terminated by us for convenience, there would be some notification, or you would have to ask us. If it was terminated for default or the laboratory was suspended as a number have been recently by the EPA, under the Federal acquisition regulations, no government agency is allowed to contract with that laboratory. That gets published.

COMMENT: All contractors are rated on their performance and this information is available through your contracting office.

COMMENT: I know that you have to be very careful about what you say about a contractor or they'll come at you tooth and nail and say that you are depriving them of ability to compete.

MR. ADAMS: A majority of our labs at hazardous and toxic waste (HTW) sites are actually sub-contractors through the A/E, so I'm not sure that performance data will always be available through the contracting office. We do maintain records of performance of labs that we use and some of the information is subjective.

DR. SOLSKY: Marty, how much of that data do you review at that level of detail?

MR. STUTZ: About 10 percent. It's going to depend on what problems, if any, surface. It's 10 percent with at least one data package per method per matrix.

COMMENT: It seems an awful lot like the Internal Revenue Service audits.

MR. ADAMS: For our HTW projects, we have a real-time, 100-percent check on the labs through the use of quality assurance (QA) samples at every site. This is not to

say that we check every data point, but we do have a check on the performance of every lab at every project.

GC/MS - A Review

Richard Karn
US Army Engineer Waterways Experiment Station

Before I get into a discussion of GC/MS, I want to briefly touch on the importance of documentation. Brian Condike at the New England Division and I recently had to take part in a deposition on some polychlorinated biphenyl results that were generated back in 1985 and 1986 for New Bedford. A lot of our discussions here today have focused on quality control and keeping good documents intact and being able to supply them. Well, it becomes very important because I was testifying with an Environmental Protection Agency (EPA) lawyer on my side of the table, and across the table the opposition had their lawyer. I had to testify twice - one whole day one time and then I had to go back the following week for a half day. At the second session they had a contractor from a very reputable lab there with them feeding their lawyer questions. It gets ticklish on how things were done years ago and it behooves us to try to read these methods carefully and try to comply as best we can, because you never know how far back your data may be under scrutiny. We had to supply chain-of-custody documents, lab notebooks showing when samples were prepared, extracted, run, instrumentation logs, calibration tables, response factors, calculations, raw data - everything so that they could reconstruct the data. They were trying to pick holes in it so they could decrease their client's liability. So, we really need to put these things that we have been discussing into practice because it really comes home when something like this occurs. Five years is a long time to try to go back and reconstruct all the data. Another thing that happened is that after the data package left our lab some of the data got mixed up in the lawyer's office. It became a problem trying to sit there and decipher the information that was all mixed up. We later had to go back and recopy all the data in the proper order. Even on routine type tasks, it is important that everything be kept in order.

QUESTION: Were you aware that these samples were a hot topic at the time you ran the tests?

MR. KARN: We knew that they were subject to litigation because of the fact that they came from New Bedford. Actually anytime that you receive samples under chain-of-custody this type of situation can exist and you should plan accordingly. It will certainly make things a lot easier if you make sure that everybody keeps good records of the entire process. I just wanted to share our experience with you.

Today I'm just going to have a brief talk on GC/MS, mainly from the viewpoint of trying to set up the system so that you can produce all the data requirements specified in the EPA procedures - first the tune, then the initial five-point curves, then your daily calibration standard and where you go from there. It kind of follows from Marty's talk, there are a lot of things that you have to be careful that you are complying with just because it's there in the regulations. Before we get into that, I know that a lot of people here don't have a lot of background in GC/MS, so I'd like to give a brief run-down here of how things work so that more of you will know what's happening. Although you

may not be running the instrument, you may have to review documents that have a lot of this information in them. And you need to understand how some of these data were generated in order to review the documents.

Whether you have a BNA analysis or a VOA analysis, you're going to have a gas chromatograph where the sample is introduced. Most of the instruments today use a capillary column in an oven and as you program the oven temperatures, most of the mixtures are separated and ideally you have one compound for one peak. That is the best situation, but it doesn't always happen. Then the sample goes into the mass spectrometer where the compound is bombarded with electrons and it breaks down into ions and then it goes through the analyzer and you only have one mass-to-charge ratio ion coming through at any one time. From there it goes into the detector and is amplified. So for a GC/MS analysis you have an m/e for the ion and you also have the retention time. This gives you two pieces of information to identify the compound, whereas on GC you only have the retention time and you have to run a confirmation column to make positive identification. Since the BNA analyses are a little more difficult than the VOAs, I'm going to focus on them. I want to cover some information that you may not find in the procedures manuals. With the liquid-liquid separatory funnel extractions for BNAs, you make the sample basic and then you make it acidic at different times in the extraction process. When this is done you need to be sure that the sample is well mixed before checking the pH and that you are not just putting in some base and hoping the whole sample is basic. Since you have other compounds in the sample, the pH may not hold all of them in solution if they are not well mixed before acidifying. Also a lot of the glassware cleaners are very basic and you need to be sure that glassware is well-rinsed so that it doesn't alter the pH. Another thing you need to do is rinse the sample container with the extracting solvent after you transfer the sample to separatory funnel. Because the samples are usually chilled before you receive them, some of the compounds may plate out on the walls of the sample container. So it's a good idea to use your first aliquot of solvent to extract the sample container and then add it to the sample in the separatory funnel.

Next, going to the concentration step where you concentrate the extract down, usually to 1 ml, you need to be very careful that you do not let this go to dryness. A lot of these compounds are very volatile and you can lose them.

A Soxhlet extraction used for soil and sediment samples has many of the same problems that you encounter in liquid-liquid extraction.

One thing that helps maintain quality control (QC) in GC/MS analysis is the surrogates that are added to the samples at the beginning of the analysis. These help to monitor problems that occur in the sample preparation. EPA has specified recovery limits that they consider acceptable for these surrogates. There are a number of surrogates to cover the span of volatility and compound type. So if you get a low recovery on one of the more volatile surrogates, you will have an idea that maybe the sample was concentrated too far to dryness. The limits are quite wide, but some of the

recoveries such as for the phenols may rarely be over 30 or 40 percent since these compounds are so water soluble.

Another QC check is the matrix spike. If you don't have enough sample, you can run a blank spike, but the matrix spike is preferred.

Moving on to the tuning operation for the GC/MS, EPA lists specific tuning criteria for DFTPP that you have to meet before you run the instrument. There are no exceptions. You have to meet these criteria before you proceed.

QUESTION: What is DFTPP?

MR. KARN: Decafluorotriphenylphosphine. EPA lists this in all their procedures and you have to meet this before you ever start developing calibration curves.

QUESTION: Do you have to meet it for every individual ion?

MR. KARN: Yes. Sometimes it's hard to get the instrument to meet specs. There has been some talk of EPA relaxing some of the requirements, but I haven't seen any revisions.

DR. SVIRBELY: It's a lot more difficult for the ion trap instruments to meet these criteria.

MR. KARN: If you adjust the target areas with the tuning compound that the manufacturer suggests, which is perfluorotributylamine, then you can usually meet the criteria for DFTPP.

DR. SVIRBELY: Finnigan just came out with a software package called Pro-Tune that does the tuning for you and from what I saw when they demonstrated it on my machine, it will save a lot of time. It costs about $2,000.

MR. KARN: From my experience, these tunes are very stable, at least for the Hewlett-Packard instruments. I haven't had to retune for over a month. They are very stable once you get them set up, as long as you don't inject a lot of super dirty samples where you get the source messed up. Then you have to clean it and retune.

Next, I'd like to cover the calibration curves, this is the next logical step in the process. Mainly I'm going to discuss the five-point calibration because in the CLP procedures all the BNA compounds except for nine must be calibrated in this manner. They are benzoic acid, 2,4-dinitrophenol, 2,4,5-trichlorophenol, 2-nitroaniline, 3-nitroaniline, 4-nitroaniline, 4-nitrophenol, 4,6-dinitro-2-methylphenol, and pentachlorophenol. For those you only have to have a four-point curve. Those compounds are a lot more difficult to chromatograph, so your detection limits are a lot higher for those compounds.

I'm going to pass out a copy of our five-point calibration (Table 1), so you can see what it looks like. The procedures tell you how to do these things, but you really don't know what they are supposed to look like until you run them. On this curve, there were some problems here when we were initially doing the curve. Normally your peak is going to come out like a bell-shaped curve and the integrator works fine on those peaks.

Table 1
Initial Calibration Data
HSL Compounds

Case No: _____ Instrument ID: 95-HP5985B

Contractor: _____ Calibration Date: 03/23/90

Contract No.: _____

Minimum $\overline{RF}$ for SPCC is 0.05 Maximum % RSD for CCC is 30%

Laboratory ID: Compound	>A1680 RF 20.00	>A1679 RF 50.00	>A1682 RF 80.00	>A1682 RF 120.00	>A1685 RF 160.00	$\overline{RF}$	% RSD	CCC	SPCC
N-Nitrosodimethylamine	.93027	.98648	.98027	1.04510	1.24012	1.03645	11.667		
2-Fluorophenol	1.24297	1.28682	1.38363	1.41693	1.40170	1.34681	5.683		
Aniline	1.89328	1.97158	2.13050	2.09384	2.28339	2.07452	7.254		
Phenol-d6	1.32800	1.36685	1.44547	1.51849	1.26459	1.38468	7.181		
Phenol	1.55435	1.71989	1.82543	2.11048	2.09139	1.86031	12.905	*	
bis(2-Chloroethyl)ether	1.56312	1.66058	1.67989	1.65712	1.72813	1.65777	3.620		
2-Chlorophenol	1.28862	1.43555	1.48352	1.46594	1.44825	1.42438	5.478		
1,3-Dichlorobenzene	1.45933	1.54986	1.55774	1.51571	1.48741	1.51401	2.743		
1,4-Dichlorobenzene	1.52675	1.54275	1.58346	1.52254	1.46198	1.52749	2.869	*	
Benzyl alcohol	.84786	.85940	.92648	.92560	.94314	.90050	4.835		
1,2-Dichlorobenzene	1.37885	1.45841	1.44172	1.38110	1.34346	1.40071	3.415		
2-Methylphenol	1.17146	1.20686	1.30208	1.29186	1.31420	1.25729	5.085		
bis(2-Chloroisoprophyl)ether	1.37243	1.41055	1.51871	1.85126	2.02058	1.63471	17.525		
4-Methylphenol	1.21184	1.21408	1.21915	1.11074	1.28208	1.20758	5.092		
N-Nitroso-di-n-propylamine	.95490	.95933	.99966	.99735	1.05571	.99339	4.083		**
Hexachloroethane	.60882	.63987	.63251	.62750	.59823	.62139	2.784		
Nitrobenzene-d5	.33429	.34857	.36573	.36571	.38118	.35910	5.023		
Nitrobenzene	.34693	.35201	.36793	.37562	.38495	.36549	4.355		
Isophorone	.72250	.70567	.74946	.73934	.72846	.72909	2.287		
2-Nitrophenol	.20250	.21281	.22176	.22035	.22385	.21625	4.043	*	

(Continued)

Note:

RF = response factor (subscript is amount in ng/uL).

$\overline{RF}$ = average response factor.

% RSD = percent relative standard deviation.

CCC = calibration check compounds (*).

SPCC = system performance check compounds (**).

(Sheet 1 of 3)

Table 1 (Continued)

Case No: _____ Instrument ID: 95-HP5985B

Contractor: _____ Calibration Date: 03/23/90

Contract No.: _____

Minumum $\overline{RF}$ for SPCC is 0.05 Maximum % RSD for CCC is 30%

Laboratory ID: Compound	>A1680 RF 20.00	>A1679 RF 50.00	>A1681 RF 80.00	>A1682 RF 120.00	>A1685 RF 160.00	$\overline{RF}$	% RSD	CCC	SPCC
2,4-Dimethylphenol	.27705	.29250	.31354	.30915	.30951	.30035	5.104		
Benzoic acid	.17068	.19818	.20530	.19094	.18559	.19014	6.929		
bis(2-Chloroethoxy)methane	.47054	.47645	.49448	.49464	.50895	.48901	3.165		
2,4-Dichlorophenol	.27245	.29287	.29549	.29282	.28497	.28772	3.268	*	
1,2,4-Trichlorobenzene	.30005	.30123	.30732	.29490	.28727	.29815	2.521		
Naphthalene	1.00544	1.02433	1.04495	1.01857	1.00072	1.01880	1.714		
4-Chloroaniline	.39541	.39180	.40380	.38468	.39400	.39394	1.748		
Hexachlorobutadiene	.15711	.15317	.15431	.13953	.13064	.14695	7.738	*	
4-Chloro-3-methylphenol	.24502	.24285	.24571	.23337	.22485	.23836	3.787	*	
2-Methylnaphthalene	.60341	.58770	.60052	.55878	.78057	.62620	14.067		
Hexachlorocyclopentadiene	.37840	.40934	.40254	.45679	.46318	.42205	8.662		**
2,4,6-Trichlorophenol	.38665	.43916	.47831	.54651	.54307	.47874	14.312	*	
2,4,5-Trichlorophenol	.38849	.41334	.37649	.31830	.30213	.35975	13.197		
2-Chloronaphthalene	1.17859	1.26055	1.28834	1.36515	1.36603	1.29173	6.083		
2-Fluorobiphenyl	1.29008	1.38460	1.45013	1.47434	1.48913	1.41766	5.768		
2-Nitroaniline	.32382	.32858	.34078	.33731	.34700	.33550	2.779		
Dimethylphthalate	1.30632	1.38508	1.26317	1.29640	1.27114	1.30442	3.713		
Acenaphthylene	1.96580	2.07249	2.07183	2.05621	2.08841	2.05094	2.386		
2,6-Dinitrotoluene	.33326	.33572	.31345	.34664	.34362	.33454	3.888		
3-Nitroaniline	.33764	.36441	.35302	.34933	.34407	.34969	2.876		
Acenaphthene	1.21520	1.23161	1.20449	1.23918	1.19539	1.21718	1.499	*	
2,4-Dinitrophenol	.17568	.18661	.18415	.20783	.18807	.18847	6.282		**
Dibenzofuran	1.59043	1.61951	1.57202	1.57570	1.56681	1.58489	1.341		
4-Nitrophenol	.24904	.25922	.24698	.24474	.23359	.24672	3.726		**
2,4-Dinitrotoluene	.37810	.38817	.35005	.35428	.32632	.35939	6.795		

(Continued)

Note:

RF = response factor (subscript is amount in ng/uL).

$\overline{RF}$ = average response factor.

% RSD = percent relative standard deviation.

CCC = calibration check compounds (*).

SPCC = system performance check compounds (**).

(Sheet 2 of 3)

Table 1 (Concluded)

Case No: _____ Instrument ID: 95-HP5985B

Contractor: _____ Calibration Date: 03/23/90

Contract No.: _____

Minumum $\overline{RF}$ for SPCC is 0.05 Maximum % RSD for CCC is 30%

Laboratory ID: Compound	>A1680 RF 20.00	>A1679 RF 50.00	>A1681 RF 80.00	>A1682 RF 120.00	>A1685 RF 160.00	$\overline{RF}$	% RSD	CCC	SPCC
Diethylphthalate	1.23608	1.28745	1.11778	1.14769	1.11635	1.18107	6.511		
4-Chlorophenyl-phenylether	.59527	.62361	.57776	.54313	.52591	.57314	6.863		
Fluorene	1.25018	1.25287	1.18418	1.16192	1.13886	1.19760	4.323		
4-Nitroaniline	.28509	.29246	.28133	.28316	.26234	.28088	3.985		
4,6-Dinitro-2-methylphenol	.13903	.14852	.15461	.18073	.17150	.15888	10.700		
N-Nitrosodiphenylamine	.49920	.53826	.55702	.55302	.57156	.54381	5.078	*	
2,4,6-Tribromophenol	.12029	.13154	.13112	.12865	.12584	.12749	3.623		
4-Bromophenyl-phenylether	.22663	.24288	.24592	.23952	.24731	.24045	3.447		
Hexachlorobenzene	.25928	.27014	.27658	.27438	.27738	.27155	2.731		
Pentachlorophenol	.13513	.15625	.16054	.17402	.16249	.15769	9.017	*	
Phenanthrene	1.12850	1.11965	1.15585	1.21156	1.22670	1.16845	4.146		
Anthracene	1.05115	1.05591	1.07507	1.05326	1.07023	1.06112	1.017		
Di-n-butylphthalate	1.23353	1.36120	1.38625	1.48903	1.50126	1.39426	7.809		
Fluoranthene	1.05027	1.04833	1.07951	1.12635	1.05280	1.07146	3.099	*	
Benzidine	.46956	.34463	.35555	.07950	.53878	.35760	49.011		
Pyrene	1.39519	1.50690	1.57960	1.65142	1.67918	1.56246	7.360		
Terphenyl-d14	.85606	.92706	.97731	.99645	1.00687	.95275	6.523		
Butylbenzylphthalate	.65676	.72702	.75205	.77018	.78790	.73878	6.915		
3,3'-Dichlorobenzidine	.38471	.40751	.42913	.20572	.42990	.37140	25.432		
Benzo(a)anthracene	1.13341	1.21932	1.24829	1.30123	1.28922	1.23830	5.419		
Chrysene	.86550	.82621	.84624	.76430	.75876	.81220	5.951		
Bis(2-Ethylhexyl)phthalate	.87474	.96722	.98205	.99327	1.07138	.97773	7.186		
Di-n-octylphthalate	2.98672	3.65426	4.36464	3.81477	3.47563	3.65920	13.717	*	
Benzo(b)fluoranthene	1.80917	2.40086	2.55731	2.78371	3.07035	2.52428	18.720		
Benzo(k)fluoranthene	1.81693	1.62304	1.84358	1,.32812	.98025	1.51839	24.010		
Benzo(a)pyrene	1.43282	1.53290	1.66129	1.71567	1.70765	1.61007	7.649	*	
Indeno(1,2,3-cd)pyrene	.59786	.64624	.72815	1.36020	1.50912	.96831	44.560		
Dibenz(a,h)anthracene	.54444	.63345	.71101	1.02758	1.07297	.79789	29.873		
Benzo(g,h,i)perylene	.50118	.61876	.73541	1.05600	1.09045	.80036	32.833		

Note:

RF = response factor (subscript is amount in ng/uL).

$\overline{RF}$ = average response factor.

% RSD = percent relative standard deviation.

CCC = calibration check compounds (*).

SPCC = system performance check compounds (**).

(Sheet 3 of 3)

Other times for whatever reason, if there is the slightest valley in the peak, it will not calculate the complete area. Sometimes I have seen it take just one little portion of the peak and say that was the whole compound. That means you will not get total peak area, so that means your calculations will not come out correctly. You can spot these when you are doing your five-point curve very easily because the average response factor is out of line with the others in the group. This is the case where if you looked at the raw data you would have the manual integration occurring because you would manually go in and integrate the peak to correct that. In this case the compound was not one of the check compounds, so a rerun was not required. Let me point out what the stars on the table mean. The stars are your calibration check compounds. For those compounds you have to be within 30 percent relative standard deviation and on your continuing calibration only 25 percent is allowed. On the compounds that are not starred, you are not limited if it is over 30 percent. So although the benzidine is 49 percent, you can still run even though the curve is not linear. Then you have the 15 system performance check compounds with the double stars. There you are limited by the minimum response factor which can't be below 0.05. The compounds that are chosen as calibration check compounds and performance check compounds are normally very difficult compounds as far as chromatography and inertness of the system.

Once you have the five-point curve, then you can proceed with your daily analyses. Daily analyses start out with meeting your DFTPP criteria. Then instead of running a five-point calibration curve, you run a continuing calibration curve (Table 2). The response factors for the system performance check compounds still have to be above 0.05 but the relative standard deviation for the calibration check compounds has been tightened to 25 percent. Sometimes it is very difficult to meet these criteria, especially we've had problems with di-n-octylphthalate because phthalates are so common in the lab. They are every place, so it's easy to pick up contamination to enhance that. I found one thing that helps us is once we get the instrument tuned with the DFTPP, we heat the GC column up to maximum running temperature and then cool it back down. I've had less problem with meeting the calibration check after doing this.

QUESTION: What temperature are you using?

MR. KARN: We're using 300°. I know in the SW-846 method, they use 270, but we use 300.

Next, after meeting this calibration check, you are ready to run your samples. If surrogates or matrix spikes are outside acceptable limits, you first check to see if there are instrument problems. If there is no explanation, it may be necessary to repeat the analysis. If no more sample is available, you may report your data, but you have to document the problem.

I will comment again that we have had more problems meeting the di-octylphthalate check compound than any of the others.

QUESTION: What causes the problems themselves?

Table 2
Continuing Calibration Check
HSL Compounds

Case No: _____ Calibration Date: 04/04/90

Contractor: _____ Time: 09:29

Contract No: _____ Laboratory ID: >A1744

Instrument ID: 95-HP5985B Initial Calibration Date: 03/23/90

Minimum $\overline{RF}$ for SPCC is 0.05 Maximum % Diff for CCC is 25%

Compound	$\overline{RF}$	RF	%Diff	CCC	SPCC
N-Nitrosodimethylamine	1.03645	.96972	6.44		
2-Fluorophenol	1.34681	1.30865	2.83		
Aniline	2.07452	1.92234	7.34		
Phenol-d6	1.38468	1.31974	4.69		
Phenol	1.86031	1.67633	9.89	*	
bis(2-Chloroethyl)ether	1.65777	1.71969	3.74		
2-Chlorophenol	1.42438	1.48542	4.29		
1,3-Dichlorobenzene	1.51401	1.49632	1.17		
1,4-Dichlorobenzene	1.52749	1.60513	5.08	*	
Benzyl alcohol	.90050	.89751	.33		
1,2-Dichlorobenzene	1.40071	1.52307	8.74		
2-Methylphenol	1.25729	1.18201	5.99		
bis(2-Chloroisopropyl)ether	1.63471	1.76926	8.23		
4-Methylphenol	1.20758	1.19187	1.30		
N-Nitroso-di-n-propylamine	.99339	1.00766	1.44		**
Hexachloroethane	.62139	.65410	5.26		
Nitrobenzene-d5	.35910	.36263	.98		
Nitrobenzene	.36549	.36991	1.21		
Isophorone	.72909	.72971	.09		
2-Nitrophenol	.21625	.20498	5.21	*	
2,4-Dimethylphenol	.30035	.28259	5.91		
Benzoic acid	.19014	.14692	22.73		
bis(2-Chloroethoxy)methane	.48901	.47240	3.40		

(Continued)

Note:
RF = response factor from daily standard file at 50.0 ng/uL.
$\overline{RF}$ = average response factor from initial calibration form VI.
%Diff = % difference from original average or curve.
CCC = calibration check compounds (*).
SPCC = system performance check compounds (**).

(Sheet 1 of 4)

Table 2 (Continued)

Case No: _____ Calibration Date: 04/04/90

Contractor: _____ Time: 09:29

Contract No: _____ Laboratory ID: >A1744

Instrument ID: 95-HP5985B Initial Calibration Date: 03/23/90

Minimum $\overline{RF}$ for SPCC is 0.05 Maximum % Diff for CCC is 25%

Compound	RF	RF	%Diff	CCC	SPCC
2,4-Dichlorophenol	.28772	.27268	5.23	*	
1,2,4-Trichlorobenzene	.29815	.31800	6.65		
Naphthalene	1.01880	1.04063	2.14		
4-Chloroaniline	.39394	.38672	1.83		
Hexachlorobutadiene	.14695	.16253	10.60	*	
4-Chloro-3-methylphenol	.23836	.23061	3.25	*	
2-Methylnaphthalene	.62620	.59420	5.11		
Hexachlorocyclopentadiene	.42205	.40940	3.00		**
2,4,6-Trichlorophenol	.47874	.42732	10.74	*	
2,4,5-Trichlorophenol	.35975	.37633	4.61		
2-Chloroanaphthalene	1.29173	1.26093	2.38		
2-Fluorobiphenyl	1.41766	1.45879	2.90		
2-Nitroaniline	.33550	.33107	1.32		
Dimethylphthalate	1.30442	1.25010	4.16		
Acenaphthylene	2.05094	2.03092	.98		
2,6-Dinitrotoluene	.33454	.27833	16.80		
3-Nitroaniline	.34969	.29574	15.43		
Acenaphthene	1.21718	1.19499	1.82	*	
2,4-Dinitrophenol	.18847	.12055	36.03		**
Dibenzofuran	1.58489	1.46519	7.55		
4-Nitrophenol	.24672	.18531	24.89		**
2,4-Dinitrotoluene	.35939	.28852	19.72		
Diethylphthalate	1.18107	1.14257	3.26		

(Continued)

Note:

RF = response factor from daily standard file at 50.0 ng/uL.
$\overline{RF}$ = average response factor from initial calibration form VI.
%Diff = % difference from original average or curve.
CCC = calibration check compounds (*).
SPCC = system performance check compounds (**).

(Sheet 2 of 4)

Table 2 (Continued)

Case No: _____ Calibration Date: 04/04/90

Contractor: _____ Time: 09:29

Contract No: _____ Laboratory ID: >A1744

Instrument ID: 95-HP5985B Initial Calibration Date: 03/23/90

Minimum $\overline{RF}$ for SPCC is 0.05 Maximum % Diff for CCC is 25%

Compound	RF	$\overline{RF}$	%Diff	CCC	SPCC
4-Chlorophenyl-phenylether	.57314	.56389	1.61		
Fluorene	1.19760	1.10872	7.42		
4-Nitroaniline	.28088	.20782	26.01		
4,6-Dinitro-2-methylphenol	.15888	.12416	21.85		
N-Nitrosodiphenylamine	.54381	.51158	5.93	*	
2,4,6-Tribromophenol	.12749	.10957	14.06		
4-Bromophenyl-phenylether	.24045	.24467	1.75		
Hexachlorobenzene	.27155	.26889	.98		
Pentachlorophenol	.15769	.13289	15.73	*	
Phenanthrene	1.16845	1.17267	.36		
Anthracene	1.06112	1.04850	1.19		
Di-n-butylphthalate	1.39426	1.33112	4.53		
Fluoranthene	1.07146	.98715	7.87	*	
Benzidine	.35760	.30222	15.49		
Pyrene	1.56246	1.58445	1.41		
Terphenyl-d14	.95275	.97449	2.28		
Butylbenzylphthalate	.73878	.71882	2.70		
3,3'-Dichlorobenzidine	.37140	.36612	1.42		
Benzo(a)anthracene	1.23830	1.19077	3.84		
Chrysene	.81220	.79742	1.82		
Bis(2-Ethylhexyl)phthalate	.97773	.86488	11.54		
Di-n-octylphthalate	3.65920	3.07208	16.05	*	
Benzo(b)fluoranthene	2.52428	2.10817	16.48		

(Continued)

Note:

RF = response factor from daily standard file at 50.0 ng/uL.
$\overline{RF}$ = average response factor from initial calibration form VI.
%Diff = % difference from original average or curve.
CCC = calibration check compounds (*).
SPCC = system performance check compounds (**).

(Sheet 3 of 4)

Table 2 (Concluded)

Case No: _____ Calibration Date: 04/04/90

Contractor: _____ Time: 09:29

Contract No: _____ Laboratory ID: >A1744

Instrument ID: 95-HP5985B Initial Calibration Date: 03/23/90

Minimum $\overline{RF}$ for SPCC is 0.05 Maximum % Diff for CCC is 25%

Compound	$\overline{RF}$	RF	%Diff	CCC	SPCC
Benzo(k)fluoranthene	1.51839	1.41931	6.53		
Benzo(a)pyrene	1.61007	1.53639	4.58	*	
Indeno(1,2,3-cd)pyrene	.96831	1.23467	27.51		
Dibenz(a,h)anthracene	.79789	1.07168	34.31		
Benzo(g,h,i)perylene	.80036	.94520	18.10		

Note:

RF = response factor from daily standard file at 50.0 ng/uL.

$\overline{RF}$ = average response factor from initial calibration form VI.

%Diff = % difference from original average or curve.

CCC = calibration check compounds (*).

SPCC = system performance check compounds (**).

(Sheet 4 of 4)

MR. KARN: You can have volatility problems with the standards. I recommend that you store them in the freezer. Also the standards will react with themselves as time goes by and you will notice that you start losing response. The best thing that I have found is keeping them in the freezer to maintain long-term stability. You can have problems with the instruments themselves—the mass spec, the GC, the capillary column, the injection port - there's no end to the problem areas.

A lot of the problems that you have are due to the injection system. Practically every time I run, I change the liner. I have a lot less problem meeting the curves when I do that. Also I break off 2 to 4 in. at the front of the column. When you do that, eventually your retention time will change somewhat. Then you can go back in and re-enter the internal standard retention times because the calibrations are done on relative retention times.

QUESTION: Do you do this every day?

MR. KARN: Yes, every day usually. We have a lot less problems if we do this routinely. It may be because we have dirtier samples than you get from routine groundwater monitoring.

QUESTION: What about tearing off part of the pre-column?

MR. KARN: The people that I've talked with who have done that seem to have more leak problems with their connections and they have to spend time troubleshooting that. So it's easier just to break off the column. You just use the same ferrules. I might mention that when you break off the column, you want to be sure that it is a clean break because the outside of the column has a polyimide coating. A straight line will cut down on reactive sites. You may want to use a magnifying glass to be sure that you get a cut that is straight across.

Another thing that is recommended is that when you put your capillary column in your instrument, you run the column all the way into the source and not go through any valves. What we do, since our instrument has CI, is turn the source to the CI position and run the column all the way into that and then back it out a quarter of an inch. But if you make that distance too close or too far, you are going to start having sensitivity problems.

QUESTION: You don't use the jet separator at all.

MR. KARN: No, not for semi-volatiles. On the instrument used for volatiles we use the jet separator, but there we are using a mega-bore column. On the small capillary column we bypass the jet. We get better sensitivity and lower background by doing this.

QUESTION: What is the life of your column doing this?

MR. KARN: Two to three months. It's a function of samples, both number and type, and keeping the oxygen down on the columns.

QUESTION: You're still using 30-m columns, aren't you?

MR. KARN: Yes. I also recommend buying the better columns because you have a lot less downtime in between changes and less calibration problems. A lot of these newer columns guarantee retention times, so calibrations are a lot more reproducible.

COMMENT: I noticed that in your Method 8270, you use Soxhlet extraction.

MR. KARN: Yes, we do. You can use sonication, but for us it's more effective use of manpower to use Soxhlet, because we can set up a batch of 12 and let them extract overnight, whereas with sonication it requires constant manpower usage for the extraction.

QUESTION: What about silanizing the liner? What do you use? Silon-CT?

MR. KARN: No, I just use dimethyl dichlorosilane.

We use Supelco standards because we have generally found them to be very reliable. To assist you in setting up five-point calibration curves, I have tabulated the dilutions that we use for both BNAs and volatiles in Tables 3, 4, and 5.

Table 3
BNA Standards Mix for Five-Point Calibration Curve
Prepared from Supelco Standards
Standard Concentration (µg/mL)
20 50 80 120 160

To obtain this concentration, add the following:

Compounds	Concentration	Add: (uL)				
1. Phenols mix	2000 µg/ml	20	50	80	120	160
2. BNA - Mix 1	2000 µg/ml	20	50	80	120	160
3. BNA - Mix 2	2000 µg/ml	20	50	80	120	160
4. Benzidines mix	2000 µg/ml	20	50	80	120	160
5. HSL-Mix 1	2000 µg/ml	20	50	80	120	160
6. HSL-Mix 2	2000 µg/ml	20	50	80	120	160
7. PAH	2000 µg/ml	20	50	80	120	160
8. BN surr. mix	1000 µg/ml	40	100	160	240	320
9. Acid surr. mix	2000 µg/ml	20	50	80	120	160
10. Internal std.	2000 µg/ml	40	40	40	40	40

Calibration standards were made in 2-ml volumetrics diluted in methylene chloride.

STORE IN FREEZER

Table 4
Preparation of Stock Standards for Volatiles Analysis
VOA Standard for Five-point Calibration

Supelco
TCL Mix 1 - 2000 µg/ml each

TCL Mix 2 - 2000 µg/ml each

* TCL Mix 3 - 2000 µg/ml each

TCL Mix 4 - 2000 µg/ml each

**TCL Mix 5 - 2000 µg/ml each

* 1,3-Dichloropropylene at 4,000 µg/ml

Cis isomer is 64 percent of 4,000	Final concentration of 320 ng/µl
Trans isomer is 36 percent of 4,000	Final concentration of 180 ng/µl

** Gases - this governs frequency of preparation
(Add last because most volatile)

Preparation:

1. Add 0.25 ml methanol to 2 ml volumetric.
2. Use syringe for standard preparation.
3. Use 0.25 ml of each standard per volumetric.
4. Make up to final volume using methanol for purge and trap analysis.
5. Open each mix one at a time, remove stock using syringe, add to 2.0 ml volumetric and close. Transfer remaining stock to a 1-ml vial with a mininert closure.
6. Transfer completed standard to mininert vial.

STOCK MIX IS 250 ng/µl

STORE IN FREEZER

Table 5
Standard Dilutions for Volatiles, Five-point Calibration
VOA Standards for Five-Point Calibration

Use the 250 ng/µl stock to make working standards.

Concentration

20 ppb -- use 8 µl in 100 ml water
50 ppb -- use 20 µl in 100 ml water
100 ppb -- use 40 µl in 100 ml water
150 ppb -- use 60 µl in 100 ml water
200 ppb -- use 80 µl in 100 ml water

Working standards are made on day of injection.

For 1,3 dichloropropylene instead of 20, 50, 100, 150, 200, concentrations are as follows:

CIS Isomer			Trans Isomer	
20	25.6	ppb	14.4	ppb
50	64	ppb	36	ppb
100	128	ppb	72	ppb
150	192	ppb	108	ppb
200	256	ppb	144	ppb

Quality Assurance/Quality Control for GC/MS Analyses

Ms. Karen Myers
US Army Engineer Waterways Experiment Station

This talk deals with the quality assurance and quality control (QC) necessary for obtaining good data for GC/MS analyses and goes through the steps we use at the US Army Engineer Waterways Experiment Station (WES) to accomplish this.

In a lab performing a number of varied analyses, adequate communication is vital. Communication begins when the principal investigator (PI) contacts the lab manager or team leader. Samples are added to the projected work schedule and priorities are assigned. The major line of communication is through the team leader. Occasions arise when direct communication between groups is necessary.

When the samples are delivered, the sample custodian collects information about the sample or analysis requested and makes sure that the proper people receive it. Data collected by the preparation chemist are made available to the GC/MS operator. Data are given directly to the data management officer who prepares the data report. Data packages are then reviewed by the team leader and the lab manager before they are reported to the PI. Our laboratory operates on a need-to-know basis. If the chemist needs information about samples in order to schedule his work or better perform his job, then he should know it.

QUESTION: Isn't that structure rather unrealistic based on the constraints that we have on lab personnel in the Corps? I count about six people there and we don't have that many people.

MS. STRONG: That doesn't mean six separate people. That can be people performing more than one duty.

Documentation is an essential part of laboratory quality control. Some forms of documentation that we use are sample traffic notebooks, laboratory notebooks, corrective action forms, raw data, QC data, and data packages. All of these must be stored long term. The Environmental Protection Agency (EPA) recommends 7 years or longer in some cases.

All forms of documentation should have certain things in common:

a. Information must be as complete as possible.
b. Entries should be in ink.
c. Entries should be legible.
d. Corrections should be made with one cross-out and should remain legible.
e. Entries should be dated, with times if necessary.
f. Entries should be signed or initialed.

We routinely use a number of SAMPLE TRAFFIC LOGBOOKS and forms at WES that are the responsibility of the sample management officer that include:

a. SAMPLE RECEIPT LOGBOOK.

b. CHAIN-OF-CUSTODY LOGBOOK.

c. SPECIAL INSTRUCTION FORMS.

d. COOLER RECEIPT FORMS.

The SAMPLE RECEIPT LOGBOOK is the main record showing that a set of samples has been received into the lab. Entries include a brief reference to the project or PI, the matrix, the number of samples, the analyses requested and a funding identification. Entries are identified by the sequential lab numbers assigned to the samples.

The SPECIAL INSTRUCTION FORM is completed by the sample custodian at the time of sample receipt. It is a preprinted questionnaire intended to inform the chemist of anything unusual about the sample or the analysis.

The CHAIN-OF-CUSTODY LOGBOOK uses the sequential lab numbers to track samples and maintains a record of the location of samples at all times.

The COOLER RECEIPT FORMS are used to check the condition of samples received via overnight delivery. They are used to identify any problems with the samples and sample information.

Some of the LAB NOTEBOOKS that we use include:

a. ANALYTICAL BALANCE NOTEBOOK.

b. REAGENT WATER QUALITY NOTEBOOK.

c. REFRIGERATOR/FREEZER NOTEBOOK.

d. SAMPLE PREPARATION NOTEBOOK.

e. INSTRUMENT MAINTENANCE NOTEBOOK.

f. SAMPLE ANALYSIS NOTEBOOK.

QUESTION: Do you use a separate logbook for each instrument?

MS. MYERS: Yes, we had a laboratory inspection recently to qualify to perform work for the Navy and this was one requirement that they had. I think it's for ease in checking.

In general, lab notebooks should be bound with the pages sequentially numbered. Entries should be in ink and should be initialed and dated. The format should be consistent whenever possible. The ANALYTICAL BALANCE, REAGENT WATER QUALITY, and REFRIGERATOR/FREEZER notebooks are used to document lab conditions on an ongoing basis. Entries should be scheduled, and should confirm that analytical balances used to weigh standards and samples are functioning properly, that reagent water is of the proper quality required for that method, and that the refrigerator and freezer space used to store samples and standards (separate units) is adequate and functioning properly.

In the ORGANIC PREPARATION NOTEBOOK, entries are made as samples are extracted. Entries should include:

a. Date.

b. Sample ID.

c. Type of extraction.

d. Method/modification.

e. Sample weights and volumes.

f. Percent solids data.

g. QC sample information.

h. Surrogate spike information and lot numbers.

i. Matrix spike information and lot numbers.

j. Problems/observations.

k. Chemist's initials.

Some problems which could affect analysis and should be recorded include emulsions, excessive amounts of reagents, sample evaporated to dryness, and some of sample accidentally lost.

DR. SOLSKY: Karen, do you keep separate notebooks for each analyst or one notebook for each testing technique?

MS. MYERS: We keep one notebook for the prep lab and that's why we require the analysts to initial the parts that they do.

CORRECTIVE ACTION FORMS are required for most QC programs. They are a tool the chemist uses to document his recognition that a situation is out of control and to document the action he takes to correct the situation.

Some examples of out-of-control situations are:

a. Reporting data with percent recoveries falling outside control limits.

b. Instrument breakdown which could cause samples to exceed their holding times.

c. Partial loss of a sample.

d. Insufficient sample to run an analysis.

e. Unusual sample matrices which interfere with analysis.

Copies of each corrective action are filed with the Data Management Officer and should be included with the data package delivered to the PI.

Lab inspectors like to see separate notebooks for standards preparation for the various categories of standards. The STANDARDS PREP NOTEBOOK should include the following:

a. Prep date.

b. Standard source and lot number.

c. Stock concentration.

d. Calculations.

e. Final matrix.

f. Final concentration.

g. Expiration date.

h. Chemist's initials.

It is important to check the concentration of your stock before using it. One of our suppliers changed the concentration of their internal standard mix during the last year and it is not unheard of to have a compound omitted from a mix. The expiration date may not apply. Spiking solutions are usually used up quickly. Calibration standards will degrade and this will affect the data. As long as the calibration check passes, the standard is good. Your primary problem will be concentration due to evaporation. It is important to store standards in the freezer and to leave them open at room temperature for as short a time as possible. This is especially important for spiking solutions, internal standards, and the 50-ng calibration standards.

The INSTRUMENT MAINTENANCE NOTEBOOK is used to document the ongoing conditions of the instruments and their condition at the time of analysis. Entries should include:

a. Problems.

b. Maintenance - daily.

c. Repairs/service.

d. Instrument modifications.

e. Return to in-control condition verification.

Major maintenance might include cleaning the source, preventive maintenance by a service technician, or changing the column. Daily maintenance would be changing the injection port liner, breaking off the head of the column, or replacing the septum. An example of return to in-control condition might be poor chromatography corrected by breaking off or changing the column.

The SAMPLE ANALYSIS NOTEBOOK/BENCH SHEETS provide a chronological record of the samples analyzed. Entries include:

a. Sample ID.

b. Diskette file ID.

c. Dilution factors.

d. Weights and volumes.

e. Flags.

Before an analysis can take place, the GC/MS must be calibrated to a five-point curve following EPA protocol and SW 846 specifically as stated by Richard Karn in his presentation. You must demonstrate the ability to generate data by injecting a standard from a source other than the calibration standard.

Each day, or every 12 hr, you have to perform the CONTINUING CALIBRATION which begins with passing Decafluorotriphenylphosphine (DFTPP) criteria and is followed by a 50-ng calibration standard containing system performance check compounds and calibration check compounds. When these criteria are passed, a method blank is injected. To pass, the method blank must have less than 5X the method quantitation limit of the phthalate esters. It can have no surrogate recoveries outside the control limits and should have no target compound contamination. Each step must pass before going to the next, and only after all have passed is the GC/MS system considered ready to analyze samples.

SW-846 and CLP limit the GC/MS BNA run to 12 hr. The 12-hr run begins at the moment DFTPP is injected and ends 12 hr later. All samples must be injected within this 12-hr period. The last sample must be injected before the 12 hr is up, but the actual run can go over the 12 hr. The number of samples which can be analyzed is a function of individual sample run time and instrumental conditions. In our lab, DFTPP, the 50-ng standard and 10 extracts can be analyzed in one 12-hr period if the system is operating properly and the samples and the Hewlett-Packard (HP) batch monitoring system are ready prior to the first injection. The 10 extracts include the method blank and any QC samples.

For this reason, we limit our BNA extractions to batches of 10. For large sample sets of similar matrices, we analyze matrix spikes and matrix spike duplicates at a frequency of 5 percent (1 in 20). This gives us two batches of 10, two of which must be blanks as required by the 12-hr run and at least two of which are matrix spike (MS) and matrix spike duplicate (MSD) or blank spike (BS) and blank spike duplicate (BSD). For every 20 extractions/injections, only 16 are samples.

The SYSTEM PERFORMANCE CHECK COMPOUNDS (SPCC) are the first to show poor performance when the chromatographic system and the standards begin to deteriorate. The minimum RELATIVE RESPONSE FACTORS for both the initial calibration (IC) and the continuing calibration (CC) are 0.050. If the SPCC response factors aren't met, the analysis must be stopped and corrective action taken before proceeding.

Some possible causes for failure to meet criteria could be standard degradation, contamination at the injection port inlet, contamination at the front of the column, and active sites on the column or in the system.

The relative response factors of the CALIBRATION CHECK COMPOUNDS (CCC) are monitored to check the validity of the calibration. The maximum relative percent difference for the IC is 30 percent. The maximum relative percent difference for the CC is 30 percent for SW-846 procedures (25 percent for CLP). The warning limit is greater than 20 percent for all compounds. If any one CCC is greater than 30 percent, corrective action must be taken. Possible causes would be the same as those listed for SPCC. If the cause cannot be found and corrected, a new five-point curve must be generated.

As previously mentioned, we have found that phthalate contamination may lead to high values for di-octylphthalate.

QUESTION: Do you think that di-octylphthalate was chosen as one of the check compounds because you do have so much problem with it and they want you to keep your system clean?

MS. MYERS: Yes, phthalates are one of the major contaminants that would come through, especially you would see it in your blank if it came from the prep lab.

After completing a 12-hr run, the quality of the surrogate and spike data should be evaluated. All BNA samples are spiked with surrogate prior to extraction and surrogate recoveries are monitored for each sample. If any one blank recovery is outside limits, the analysis must be stopped and corrective action taken. If one sample recovery is less than 10 percent or more than one sample recovery is outside limits, corrective action should be taken for that sample. The normal corrective actions are to check calculations, check instrument performance, and recalculate or reanalyze if a problem is found. If nothing is conclusive, you may choose to re-extract and re-analyze, or flag data as "estimated," and document with a corrective action form.

Our lab performs a minimum of 5 percent matrix spikes prior to extraction. Table 1 is a list of the compounds and the EPA recovery limits. Recoveries should be within advisory limits, and the relative percent differences between the MS and the MSD should be within advisory limits.

There are no firm guidelines for rejecting sample data on the basis of matrix spike data. The recoveries are monitored to determine long-term precision and accuracy of the analytical method on various matrices. Trends will help the analyst evaluate reasons for outliers. Analysis of BS and BSD may be used to determine whether the problem is due to the matrix or a problem within the analytical system.

The same corrective actions mentioned for surrogates apply to matrix spikes.

Table 1
Matrix Spike Recovery Limits

Fraction	Matrix Spike Compound	Water	Soil/Sediment
VOA	1,1-Dichloroethene	61-145	59-172
VOA	Trichlorethene	71-120	62-137
VOA	Chlorobenzene	75-130	60-133
VOA	Toluene	76-125	59-139
VOA	Benzene	76-127	66-142
BN	1,2,4-Trichlorobenzene	39-98	38-107
BN	Acenaphthene	46-118	31-137
BN	2,4-Dinitrotoluene	24-96	28-89
BN	Pyrene	26-127	35-142
BN	N-Nitroso-Di-n-Propylamine	41-116	41-126
BN	1,4-Dichlorobenzene	36-97	28-104
Acid	Pentachlorophenol	9-103	17-109
Acid	Phenol	12-89	26-90
Acid	2-Chlorophenol	27-123	25-102
Acid	4-Chloro-3-Methyphenol	23-97	26-103
Acid	4-Nitrophenol	10-80	11-114

Dioxin in Sediments, So What?

Mr. Frank Snitz
Detroit District

This story is about the Saginaw River in Michigan. It's in the area where it flows north to south emptying into Saginaw Bay, which is an arm of Lake Huron in the Great Lakes. What's going on is a contained disposal facility (CDF) site search. In connection with the search for a site the sediment has to be characterized. The nature of the site and the nature of the CDF should be competent and suitable with that material. The river is a twisty, snakey channel 17 miles in length inland and about 11 miles out of Saginaw Bay. I'm not real sure about the quantity of dredging each year, but it's in the range of 100,000-200,000 yards a year. If we dredged 200,000 yards, we would have dredged 400,000 if we could. I have data that corresponds, I think, to about 8 miles of twisty river channel and there is a very interesting streak from Middle Ground Island down to the mouth of about half a dozen stations where the values are consistently in the single digits of polychlorinated biphenyls (PCBs) (mg/kg) and one station has a value of 13. That's kind of interesting because it's an area where I feel sure that if you want PCBs in this range you can go anywhere in this area and get it. There's a fairly good probability that anywhere you go, it will be there. As a matter of fact some of the work I do is for the Assessment of Remediation of Contaminated Sediments, section 118 program, where I was asked to find some PCB material at typical levels of the Corps project. Taking the big risk, they said you have to have about half a dozen stations and every single one of them has a measurable value and a pretty good probability it can be cleaned. So we collected 100 gal and shipped them out to the Environmental Protection Agency (EPA) Duluth Lab for compositing and treatment trials - this was December 7th. I confidently went ahead and did it, but I don't have the results back yet.

There is a typical spread of PCB values that have consistently elevated levels of PCBs of about 13 ppm. This particular parameter probably defines the character of the material more than any other. It's silty, sandy, and heavy metals are not exceptional, with occasional spots of Pb at 50, 60, maybe 100 mg/kg. The total Kjeldahl nitrogen (TKN) at some stations is 1,000 or 1,500 mg/kg; oil and grease, the same thing; and phosphorus is about 500 mg/kg. How would you categorize this material in terms of its need for confinement or for water disposal, or containment disposal? Let's have some volunteers.

MR. ADAMS: How long has this been monitored, what's the time frame on the PCB level?

MR. SNITZ: Good question, 12 years, as long as I've been doing it, and some time before that. 1978 is the first set of data I've seen and it's been fairly consistent. There are three sets of data and they are very consistent in this area in this range of PCBs. There is one station right at the mouth that is in the range of 20 mg/kg. Confirming its consistency, there was a 100-year storm that moved a lot of material in 1986. The data that I'm discussing is from 1983 and 1988.

MR. ADAMS: Based on the numbers you gave, I would say the material must be contained.

MR. SNITZ: Next question is what type of confinement? Would we build a hazardous waste site? Does anyone have any special strong feeling that the material should be under 10 ft of clay with monitoring wells sunk down, carbon filters, treatment of the effluent, etc.?

MR. JENKINS: You are mainly concerned about the suspended material because the stuff is not going to be very soluble.

MR. ADAMS: Understand that this material is already in the environment and exposed to all the biota that are out there. We are going to make that situation better whatever we do.

QUESTION: Is the decision going to be based on the PCBs?

DR. SVIRBELY: PCBs are considered to be carcinogens but all the data indicate that they are not primary carcinogens. They are secondary carcinogens possibly acting with immunotoxicity. I think their main problem is not so much their toxicity level, although they do cause some dermatitis and some neurological symptoms, but the thing is they are just so non-biodegradable. They just hang around forever, they are all over the place, they are in Antarctica, they are in the Ohio river basin, they are everywhere. Everybody in this room has PCBs in their kitchens and that is what worries people, not so much that they are that toxic, but they hang around so long and if they are not decreasing, they are going to be bioaccumulating.

MR. SNITZ: There is a lot of concern for PCBs. It is certainly elevated in the fish in Saginaw River and Saginaw Bay; so there are concerns of human consumption and public health concern, especially of lactating mothers who are probably the most vulnerable human species there is.

MS. STRONG: Your biggest problem is the public reaction to the whole situation.

DR. HEITKE: What do the regulators say?

MR. SNITZ: Well that's the point I'm about to make. But in the terms of history, this material contains what I call competent, conventional CDF graded limestone, clay bottom, semipermeable dikes. The facilities are in a large enough area to allow good settling for the solids and the overflow of the pond water flowing over the weir tends to be in suspended matter of good quality or better than the surrounding waters. So that is the prescribed containment. TCDD. You know what these four letters mean, you are supposed to shake in your boots and fall right out of your seats. Oh my God, there are dioxins in the sediment! Ppt, what are we going to do about it? That substance not only has toxic properties but sociological.

QUESTION: Is that total TCDD?

MR. SNITZ: No, it's 2,3,7,8. It's the bad one. Look at those levels. They are truly elevated. They are below 1 ppb, it hasn't dropped.

MS. STRONG: As long as you don't find it you don't have a problem, it's when you find it you have a problem.

MR. SNITZ: Traditionally 1 ppb has been the cleanup trigger level. Interestingly enough, we sampled this river previously in 1983 or '84 and found all below these detection levels. You know this "below detection" is critical terminology. As all of us know, between 1983 and 1988 there has been substantial improvement in detection levels. Where we are now looking at single-digit values, most of these single-digit values would not have shown up in our previous examination. Dr. Michael Gross of the University of Nebraska's GC/MS lab did them in 1984 and the detection he was reporting at that time was 15 to 25 ppt. However, even with those old detection levels we would have seen something like the 50, 90, 95, and 88 ppt that we see now. So that suggests that while it may have been there before, it clearly was not elevated to the extent it is today. One hypothesis that is consistent with the two sets of observations is that this is old material off the side of the channel far, far upstream associated with Dow Chemical located on a tributary, and the 100-year storm washed it out. Is it true? I don't know, but the theory is consistent with the two observations.

Well, what do you do with this stuff? My boss says we have to make the EPA and the state face it so that they can react and have some contemplation of the fact that it's there along with PCBs. So we have a process going on where we address it, discuss it, and figure out what kind of containment and disposal facility we need. I made the mistake of not consulting with EPA before going forward with the analyses, so this data did not undergo the ritualistic, quality control/quality assurance (QC/QA) protocol. It's too late, we've already done it, but we do have to sanctify the data.

DR. DAVIES: Weren't there some QC parameters run with these samples?

MR. SNITZ: Yes, the 1988 study was run by IT Corporation in Tennessee I believe, but since we didn't cite the EPA protocol, the QC they reported wasn't adequate for the official QA/QC coordinator. So we ran volume duplicates, we ran the second set, again with the same company and submitted them as additional samples with different numbers. I think this is the best matching data I've ever seen in my life of this nature and of this concentration. The second set was derived from taking aliquots from the sample jar. Our prime contractor took aliquots from the sample jar, this was not air-dried, turned into powder, homogenized, and given every opportunity to become more homogenous.

MS. STRONG: But that is the EPA protocol, not drying it and grinding it and such. The EPA protocol is mixing your wet sediment and then taking the aliquot out.

MR. SNITZ: Well, I can see that because the more you burden it, if you do have matching data, I would think it would eliminate a lot of questions.

So, what can you say about this stuff? I can say beyond a doubt it's there. I can say with a lot of certainty it's present in patchy variable concentrations ranging from below single digits to the low 100 ppts. I can say that with certainty. I can't pick any single spot and say this is 6 plus or minus 1 or 100 plus or minus 10 or 20. I can't say that.

Why am I going into all this? I'm very frustrated with this. These are the things I was trying to tell EPA but it wasn't good enough for the QA/QC coordination people. We did this a third time. I don't think anyone in this room will ever see better data than this. All samples are aliquots out of the same jar. Three aliquots were taken by our prime contractor who sent two of them out blindly to the same contractor and the third aliquot was sent to another contractor, ENESCO, in California where they ran it using the CLP protocol. Well, it's there with as much reliability as we can possibly have. So now we are positioned to make people face it.

We also have the furan data which is not quite as consistent as the dioxins. It is also pretty good, not quite as good as the dioxins, but you can draw some real definite conclusions. It's present, and present for the most part in the 100 ppt range, so they have dioxins and furans.

Let's put it all together. What's the big deal? What changes, if anything? Given this set of data, what if anything has changed in terms of designating or designing a competent disposal facility for this material? Carbon filters? Ten feet of clay above and below? Treat the pond water? Monitoring wells all over the place?

MR. ADAMS: I think now you have to dig it up, put it in barrels, and send it to the same warehouse in Missouri that EPA uses.

MS. STRONG: Except that EPA won't take it, you can't landfill it. Let me share a war story on the dioxin. Several years ago there was an explosion on the Passaic River in New Jersey and dioxins were released. The US Army Engineer Waterways Experiment Station (WES) got involved with a project upriver from this location. We got large quantities of sediment because we were going to do bioassays and things like that. Because it was upriver no one thought anything about all the dioxins. We did all our many tests and then someone said maybe we should check this for dioxins. We sent it out to a contractor lab in California. The levels in the samples ranged from <1 to >5 ppb, not ppt. Suddenly we have a problem. The California lab ships the samples back to us and we have no way of disposing of them. Nobody will take these samples. The site in New Jersey where they suspect the dioxins came from would not accept the samples because it is a Superfund site and they say it would be like they were accepting responsibility for the dioxins upstream. We have spent the last year or year and a half trying to get rid of five jars of sediment that contained dioxins from 1 to >5 ppb. If it had contained <5 ppb, there are some landfills that will take it. It's that 5-ppb range that threw it out, so nobody wanted it. We have just recently located a facility in Texas that we think will store it. They have a permit pending; but if at the end of the year they do not have a permit, those samples will probably come back to WES. So it is a problem.

MR. SNITZ: The point is that PCBs predominantly characterized this material. If you confine it competently to contain the PCBs, this other stuff can go along for the ride. What biological effect is going on, in that we had this before we suddenly identified these additional things? Well, I don't know precisely, speaking in terms of ranges, it is extremely unlikely that the effect of the dioxins will be as significant as the PCBs. You might say the effect associated with this level of dioxin might have the effect of

2.5 ppm of PCBs, or 3, 4, or 5. So if you have 2 ppm in one instance, and then you find out that this 2 has the effect of 4 or 5, do you say "Wait a minute, this 2 has the effect of 4 or 5?" Are you going to redesign your proposed containment? I don't think so.

QUESTION: Has anyone done any tissue analysis, like crab or fish?

MR. SNITZ: We have not done any tissue analysis on fish in the area. It's been extensively done, I believe, by the Food & Drug Administration (FDA). They have been watching dioxin in the fish for a long time. As a matter of fact I believe it was somewhat evaluated in the fish in the early 80's. In fact they put a hold on the carp. It is shipped to New York where commercial companies process it to make filter fish, and there was a year where it was hard to get canned filter fish because of the dioxin in the filter fish. The levels have since returned to normal. I think carp, which are the most burdened fish there are, have levels that are about 10 ppt or less, and I think the FDA allows that.

MS. STRONG: What about the water, is it detectable in the water?

MR. SNITZ: I don't know, but I rather doubt it.

MS. STRONG: EPA is now promulgating .014 ppq in water.

MR. SNITZ: That is our nightmare. Since it is identified in the sediments we are facing pressures to monitor effluent from the CDF,treated and guaranteed that the dioxin levels will be below some presumed value. It just doesn't make sense to focus all the time and amount to hyper-management of this one small constituent which I would submit has a minor effect compared to the massive PCB presence there.

DR. SVIRBELY: Your lecture is titled "Dioxin, So What?" No one understands why it's "So What?". You have to understand how the EPA looks at carcinogens. You have mutagens, the primary carcinogen; you have secondary carcinogens, and co-carcinogens which can act by a variety of methods. A primary carcinogen, if it is present in food, if it is present in a cosmetic, if it has been found to cause cancer in one animal, must be banned because of the primary carcinogen. Carcinogen is a magic kind of talk. So the thing is when you have a mixture of primary carcinogens like TCDD and PCBs, you actually have a path like you have with cigarette smoke where you have tars which are primary carcinogens, causing aromatic hydrocarbons and benzo(a)pyrene, which is not only a primary but a co-carcinogen too. In order to understand this you have to understand how the EPA models carcinogenic effects and how the EPA looks at it. They take the most extremely conservative approach you can take. Every assumption is a "worst case" assumption. Now as to where those TCDDs are coming from, PCBs are very similar in structure and there may be some biodegradation. They may be generated by bio-tuff pull of the river. PCBs are metabolized and they also weather.

COMMENT: Since you have to dredge maybe you are exposing something that has been under there for years.

MR. SNITZ: We don't expect to face problems on the dredging as such. Preliminary rumblings indicate that we will face building hyper-containment facilities.

MS. STRONG: Hasn't New York faced the problem that if they find dioxin, all operations cease? Isn't that their policy?

MR. SNITZ: Not exactly, I think New York is trying to establish a distribution that describes or characterizes background levels at the dump site, and then they will establish an acceptable number, below which is "OK" and above which is "not OK." Most material that has dioxins has a lot of other things and it's hyper-focusing, distortion, and distraction on overall competent, effective, and rational management.

MR. SHANNON: Regarding the limits in water, is that filtered water? You know even nice clean water still has a little bit of sediment when you take it out of the stream. Do you filter it like you would for dissolved metals?

MS. STRONG: I'm not sure what the regulations specify.

MR. ADAMS: Since it is an organic contaminant, it would probably be an unfiltered sample.

Development of a Simplified Field Test for TNT and RDX in Soil

Mr. Tom Jenkins
Cold Regions Research Engineering Laboratory

I had the opportunity in the past to present the work we did in developing methodology for explosives and concentrated on laboratory methodology. Today I'd just like to describe to you some work we are doing for the development of field screening methods for explosives. The original talk that I mentioned to Ann concentrated on TNT, but since then we've had some positive results for RDX so I thought I would mention that as well, although I will dwell on the TNT aspects. The other thing I had intended to do was to actually demonstrate the technology instead of just talking about it. I had two devices to do the the work. One was the device I used when I demonstrated at Toxic and Hazardous Materials Agency (USATHAMA)-the people kept it and are using it and the other is actually being used by my co-worker doing a test in Anchorage, AK, at a site where they are screening for explosives. So unfortunately I don't have anything to demonstrate - only a few slides.

We realize obviously there is a lot of utility for laboratory methods but one deficiency for laboratory methods is that it takes a while to get the results back. In real-time it is very difficult to try to identify the location of contamination or try to map it when it is sent off to the lab and you don't find out until much later what the concentrations were. Also when you are in a cleanup mode, and you have the bulldozers out there, and you are actually doing something that's expensive to the soil to clean it up, such as incinerating it, you may want to have some more real-time ability to analyze it to see if you have to continue excavation or if you can stop. So there are a number of times when field screening methods should be available. The last low-cost alternative for using field methods would be when you have thousands and thousands of samples. You may want to screen them first so that you don't have to send all of them to the laboratory and pay whatever people are charging these days. When we were trying to develop concepts on how we might proceed, these were some of the criteria we looked at: (1) totally field portable equipment so that you could do the work right on the site if you wanted to, (2) fast turnaround so you could do lots of samples if you needed to, (3) low toxicity so that you wouldn't be subject to a lot of constraints using the chemicals in the field, and (4) a good correlation with the laboratory procedure which I think is always useful.

This is an outline of the procedures that we have developed, you can see that we have a TNT procedure and an RDX procedure. So for now we will talk about the TNT procedure and we will come back to the RDX procedure. Basically we take a soil sample and extract it with acetone. This is a fast extraction by shaking. We filter it, we obtain an initial absorbance, we add two solids - basically you do not have to measure them - we filter it, a color develops and we measure the absorbance at 540 nm. I want to point out this reaction is known as a Janowski reaction, it's been known since 1886. We are not inventing new chemical reactions, people have known about this for some time. Just a quick run-through, take 20 g of soil and 100 ml of acetone - shake it up, filter it

through a disposable syringe filter, add a pellet of KOH, add a little of sodium sulfide, shake for 3 min and filter again. A reddish color develops and you can either read it by visually looking at it or you can put it in a portable Hach DR2 spectrophotometer. We use about 540 nm as the wavelength.

DR. DAVIES: How long does it take the color to develop?

MR. JENKINS: Three minutes, you don't want to wait too long - I will talk about the reaction and I will explain why.

Basically the reaction is formation of the carbanion of acetone which undergoes a nucleophilic attack on the electron-deficient aromatic nucleus and you get the formation of this anion. This anion is very highly colored and if you allow the reaction to proceed, if you keep it in contact with the base for an excessive length of time, you will get the addition of a second molecule of acetone and this decreases the absorptivity. The reactions are fast. The extraction is 3 min followed by 5 min of waiting to allow the sediment to settle, add the base and shake for another 3 min, immediately filter, and read it. The whole process is 15 min. Joe has a procedure similar to this for TNT except I believe he uses methanol. We started with methanol, I should point out there are two disadvantages of methanol. I stumbled across acetone by accident. I must not lead you to believe that there was some brilliant idea. I picked up the wrong bottle and I got a much better response. So I went back to the literature and found out why. Acetone gives about a factor of 4 increase in molar absorptivity compared to methanol. I also have some solubility data which shows acetone is a much better extracting solvent than methanol, so that is a double advantage of using acetone. The third thing that's great about acetone is that you can get it at a hardware store anywhere at sufficient purity.

QUESTION: In your lab method by HPLC, do you use a mixture of acetone and water for extraction?

MR. JENKINS: We don't use acetone for HPLC, we use acetonitrile just for extraction. The reason we didn't use acetonitrile for the field method is because acetonitrile is more toxic and you don't want it running around in the field. We prefer to use it in a laboratory setting. Acetone absorbs in the UV so you don't want to use it in the HPLC procedure because it interferes with the determination of the initial analytes which are HMX and RDX. Actually acetone is a better extraction solvent, but you can't use it. Also some of the analytes are not stable enough in acetone.

DR. HEITKE: Is the solubility of KOH problematic?

MR. JENKINS: It would be, except that all soils have water in them and that's one thing that we had to consider - the variable amount of water. Since you can't do anything about it, you have to use it. If you didn't have water, methanol would definitely be the extractant of choice because KOH is much more soluble in methanol. In fact that is why you use KOH and not NaOH. With the visible absorption spectrum of the anion trinitrotoluene, you see we get a double peak - one around 462 nm and one around 540 nm. We get the same phenomenon that we get for trinitrobenzene so that the method will not distinguish between the two. Both of the anions in both of these

compounds are reddish in color. Dinitrotoluene also produces a color. There's a shift in the absorbance and since it absorbs in the red and not the blue, if you had a high concentration of dinitrotoluene, you could detect it visually as a bluish color. Mononitrotoluenes did not respond, they are not sufficiently electron poor.

Those of you who have extracted soil or sediments with acetone know that you oftentimes get a yellow color. That's the reality of it because there is humic material in the soil that you will extract with acetone. We took a potting soil that was intentionally high in humus and we extracted it to find out what the visible absorbance spectrum would be. We ran the sample before and after adding the KOH and sulfide. The lower spectrum is what we got before we added the reagents and the above line is what happens after we added the KOH and sodium sulfide. We were concerned about this because we were going to use a blank to subtract out after we make our final measurement. Two things of interest, we could measure at 462 or we could measure at 540. We chose 540, obviously we have much more problem due to the background material at 462. The second thing is even if you have the absence of TNT if you measure at 540 you get an increase and you can't contribute that to TNT because that's not what is causing the increase; it's just the reaction of the humic material with base. I should point out these are not pinkish in color. They are yellow. Visually you would not say TNT was present but you could if you made your absorbance measurement and interpreted it correctly. So what we wanted to do was find out the ratio of the blank value "after" compared to "before" reagents were added so we could correct for it properly. So we took a lot of samples that Joe had been so kind to send to us at different times from a lot of different Army facilities. These were the ones in which we determined by our laboratory procedures that there were no explosives present at detectable levels, so these are all blanks. We did the procedure in the normal manner. We obtained the initial absorbance, we then added the reagents and obtained the absorbance again and calculated the ratio between the two. On the average it about doubles, so we take the initial absorbance, double it, and subtract it from the final result. That is how we made our measurements.

We had another set of Missiouri River Division-supplied samples, that we did detect explosives in by our standard laboratory procedure. What we wanted to do was compare results from the color method approach versus the HPLC method. Since the field method does respond to both trinitrobenzene and trinitrotoluene we included both. The colorimetric procedure is really the sum of the two. We took the individual values we obtained for the two by HPLC and compared them to get a feel for how well it worked. In general just by looking at the numbers it looks like it worked pretty well, we were impressed. We made a correlation analysis and the correlation coefficient squared was excellent, so we were surprised, amazed, and happy. At that time, I went to USATHAMA and gave a demonstration (we also went through the normal certification procedures that USATHAMA uses to establish the reporting limits and we got a reporting limit around 1 ug/g). One of the project managers at USATHAMA wanted to immediately take this out to the field and try it. We have learned a few things since then but we did take it to Umatilla, OR, about 3 months ago and used it in the field with some

pond sediments. We obtained the colorimetric results in the field, we then took the samples back to the lab and analyzed them. One thing we didn't know at the time was that the reaction continued if you allowed the base to interact more than 3 min. We did not take any special pains and we figured that out after those results. Those results obtained in the field did not compare nearly as well as the samples we analyzed in the laboratory.

We are really happy with this method, it is very simple and very easy to do, takes very little training, the acetone is available locally, and correlation is very linear according to the standard Beer-Lambert law. Generally where we had some control tests, the correlation with the standard method was good. For a screening method, the fact that it also detects TNB and tetryl is an advantage as opposed to disadvantage. It's an interference if you are only looking for TNT, but we consider this to be a screening method. If you get a detection, then you send it to the laboratory and get a result. We also have a method for water as well.

There was not a field method for RDX as far as I know in the environmental area. There were some tests that were done by the forensic people but never configured for our kind of purposes. We wanted to see if we could piggyback off of the TNT method, so we wouldn't have to extract again. I should point out we use 20 g of soil and 100 ml of acetone. We do that for two reasons: (1) so we have enough sample to do both procedures, and (2) the water is important and the TNT method is subject to a negative interference if the water content in the acetone gets too high. If we keep the ratio 20 g to 100 ml, the water cannot get high enough to cause us problems. On the RDX procedure we obtain the initial extract and filter it and obtain the initial absorbance at 540 and then we go through an additional step in that we pass it through an anion exchanger. The reason we do this is because we are eventually going to detect RDX as nitrite so we have to remove nitrite and nitrate from the extract to begin with. We then add zinc and acetic acid which reduces RDX to nitrite, we filter it, we add Greiss reagents and we obtained absorbance at the same location at 540 nm. Again this is not a new reaction, it is even older than the other one. This is what we do to put it through the anion exchanger, it is not complicated, the only constraint is that you can't push it as fast as you would like. You can pass it at about 2 ml a minute, but you only need about 10 ml. It is about a 5-min process. We used Supelco alumina strong-anion exchange, which is faster than the reverse-phase one, so it really works well. We tested it when nitrate/nitrite were at the highest levels you would expect to run into in a soil sample. We used a disposable syringe, which you can purchase; they fit together like a unit.

The reaction sequence that we use here is somewhat complicated but the amazing thing is the rate at which RDX reacts with zinc. We actually preload the syringes with zinc, pour the sample in, invert them, and filter them. RDX has now been converted to nitrous acid because it's an acetic acid solution. These reagents are then combined into one called the Greiss reaction. Nitrous acid reacts with something like sulfanilic acid or procaine depending on the R group to diazotize the compound which then couples with n-n-dimethyl-1-nitronaphthylamine to form this rose-colored dye, which

has about the same molar absorptivity as the TNT anion - roughly about 2 or $3x10^4$. It gives you a visible spectrum with a maximum luckily right around 540 nm so we can do everything with the same portable Hach kit and don't even have to change the labeling. I don't have a lot of data like I had for the TNT because this is more recent and the person who is doing the work is in Alaska, so I have to just tell you that it works.

MR. ADAMS: Have you done temperature dependence on this?

MR. JENKINS: No, that's a good point. That is something we have to do because we did not cover for that. But if it takes a little longer, we'll have to document that. This work is all ongoing and has been done in the last 2 or 3 months; there are still a couple of things that have to be done and that is one of them.

As for the RDX method it's usable in the field. The feedback from Marianne, who is in the field now, says it is working fine and no problems. The RDX method can also be used to screen for nitrocellulose and some others. The Greiss reaction can be premixed so it is very convenient - maybe slightly less convenient than the TNT method but very usable in the field. So if you combine the two tasks, you can detect some of the more important contaminants in explosives, (the nitrobenzenes/nitrotoluenes we can't detect by either method). The dinitrotoluenes, TNT, trinitrobenzene, and tetryl we can detect by the one method; the other explosives like RDX we can detect by the second method. The interesting compound that we cannot detect at the moment is HMX, which is the eight-member ring equivalent to RDX that for some reason is not reduced at the same rate by zinc. It is usually an impurity in RDX, so it is not often there by itself, but I just wanted to point out that it is something that we cannot detect at this time. Combining the two procedures we can screen for almost all the explosives we would worry about.

For water we can do exactly the same reaction sequence, we have to pass the water through a solid-phase extraction cartridge process first. Unlike laboratory procedures that use these, they don't have to be pre-cleaned. They can be used just as they are because any impurities don't react with the chemicals. This is the slow step, it takes maybe 40 to 45 min to get 500 ml through these, so the water method is slower. You can set up a bank of these to do all at the same time.

We can see 5 ug/L which is almost the requirement; you have to be able to see 1 or 2 ug/L for RDX, HMX, and TNT. We can verify 5 ug/L visually just by saying it's pink. If it's pink, it's 5 ug/L or greater. I want to point out that USATHAMA sponsored this work and Marty has been our project monitor for many years and it has been a very enjoyable relationship.

Here are some of the solubilities that I did want to point out. TNT is amazingly soluble in acetone, 109g/100g. Methanol is quite a bit less soluble. I have never found a value for acetonitrile but I will have to determine it because I don't have it, but I suspect it is between methanol and chloroform.

I should point out that we get into all kinds of arguments with contractor laboratories with our standard method that we use for laboratory for extraction. They don't like to

extract overnight. When we use acetone, the extraction rate is much faster. I wish we could use acetone for the extraction for the laboratory method but it interferes.

MR. ADAMS: Could you get into solvent switch?

MR. JENKINS: We could, but one of the reasons we have good agreement in data with Joe's lab, for instance, is that the manipulative steps are minimal. If you go down to where you have to evaporate and exchange solvents, your imprecision goes way up and the cost of analysis goes way up.

MR. ADAMS: The procedure is so simple, but the trouble is the overnight extraction, people object to it.

MR. JENKINS: They do, but I have talked to Blaze Willis at MRD and asked him if he found any problem with the sonication overnight.

DR. SOLSKY: Actually it worked to our advantage because we could set up and do all the work during the daytime and do the extractions overnight.

COMMENT: You could load as many jars in there as would fit.

MR. JENKINS: Exactly, and we even did a study to find out if the number that you loaded into the sonicator reduced the extraction ability. It does not, you can fill it up. You have to keep it cool, though, so we run a cooling coil of water - you don't want to let it heat up overnight.

COMMENT: Our sonicator has a drain hole in the bottom, we took a piece of tubing that was big enough to fit in there and just stuck it in there so deep and turned the water on.

MR. ADAMS: Were you able to you use the bath sonicator rather than the probe?

MR. JENKINS: Yes, it's all done in the bath so you can do 50 at a time. I would not use the probe because of the potential of cross contamination. We tried the probe approach - we didn't use that actual probe but we used a sonicator and with it the rate of extraction slipped. You just needed an extended interaction. Acetone is so good on the other hand that it doesn't require the same interaction. When we compared the extracts directly between the field and laboratory extractions using HPLC (in this case we were only looking for TNT so we didn't care that we couldn't see RDX or HMX) we got 96-percent recovery compared to 18-hr extractions.

DR. HEITKE: Could you explain the nature of the negative interference for water?

MR. JENKINS: That's a good question Bruce, I could only speculate. I don't know the answer for it. I used solutions with known concentrations in water and did the reaction. The absorbance slowly fell off and then drastically fell off so it does in fact happen but I don't know the reason.

DR. HEITKE: Did you indicate that over time that you could have set the condition of the anion?

MR. JENKINS: That's apparently what happens if you leave it in contact with the solid reactor.

QUESTION: What is the HPLC detector?

MR. JENKINS: It's UV 254 nm, a very general detector but we haven't found any interference problems. We do use a second column confirmation procedure. I do have reprints if anyone is interested in the laboratory method. The EPA has finally issued a draft of the method in the SW-846, Method 8230. The ASTM has put that method through their procedure and it's being or has just been voted on by the full committee. The AOAC has adopted it as their standard method and USATHAMA has adopted it as their standard method as well.

Discussion Session

Ms. Ann Strong, Moderator

DR. KORAN: We've had a lot of discussion on quality assurance (QA) and quality control (QC) and most of these programs deal with work in the hazardous and toxic waste (HTW) arena. I am concerned that we do not have systems similar to this in place for our water quality work.

MR. ADAMS: Having worked in both programs for quite some time and now working in the HTW program with the laboratory validation procedures and quality assurance program that we have, I can see some very definite advantages to moving towards the HTW-QA style program for our water quality program. We have uncovered difficulties in laboratory analytical services with our QA program that would never be discovered in a water quality program. We definitely need to make a move in that direction.

MS. STRONG: I know a lot of people think the procedures out of SW-846 just automatically work for sediment samples. They don't, although they are probably better than most other available methods. I don't know what the solution for that is, we need some better procedures for some of the sediment analyses. We also need some better procedures, particularly for seawater analysis, but here again this is not something that's covered in the HTW concept.

DR. DAVIES: Can't the US Army Engineer Waterways Experiment Station or the US Army Cold Regions Research and Engineering Laboratory or someone develop some of these?

MS. STRONG: Yes, but we need the money to do it. There is a need, but no money.

DR. DAVIES: Don't the "Dredging Kings" have money for that?

MS. STRONG: Right now there is not a lot of money in those programs. We see it coming down the pipe but it's not here yet.

MR. JENKINS: Civil Works has never spent money on analytical chemistry research. It's hard to get them to believe anyone other than the Environmental Protection Agency (EPA) can develop a methodology.

MS. STRONG: And EPA hasn't developed the methods either.

DR. DAVIES: Well, they probably won't.

DR. SVIRBELY: I worked in clinical toxicology for a long time and was a member of their proficiency testing program and have always wondered about the lack of proficiency testing in this whole area. Your HTW oversight QC is about the only proficiency test in the area. There is one offered by EPA but they are closing that. You can say we are going to certify someone, and unless you have a legal mandate it really doesn't mean anything. People ask "Who are you to certify us?" Something is needed just short of certification. Just simply having a proficiency testing program in place for

samples twice a year or four times a year for water quality in addition to HTW will at least let the labs know how they will perform because a lot of times they don't even realize they have problems.

DR. DAVIES: There is no reason why we couldn't include, for the Division laboratories, whatever water quality parameter performance audit samples they would request at the time of audit samples. We've prepared audit samples for TVS, TS, and just about everything in the book for various projects and there's no reason why they couldn't be used by the HTW or Water Quality.

COMMENT: We have the round robin samples.

MS. STRONG: Yes, but in addition to that I think maybe we need an inspection of the laboratories themselves for that type of work.

MR. ADAMS: When we send laboratory audit samples to commercial laboratories, they often fail for various parameters.

MS. STRONG: Right, it's rare that one gets them all right!

MR. ADAMS: And when they do get them wrong we take the results that they have obtained and study the approach that they have used to analyze the sample and we almost always uncover some deficiency in their analysis that leads to helping them get the analysis right, so we do provide correction measures through the audit sample program and it's a very labor-intensive hands-on process. It's not just a round robin where you sent it out and got the results, and sent the results back. You actually talk and work with these people and we don't begin the laboratory inspection process until they have passed all the performance audit samples. Then we visit the laboratory and work with them some more on the problem areas they have had. We go through the laboratories and find deficiencies in their operations and help them to improve. We have a very strong hand in the commercial laboratories and we use it and it's successful.

MS. STRONG: One thing about it is that we have leverage in the HTW program. Maybe we need to consider an Engineer Regulation for the Water Quality and Dredging Programs similar to that to make sure that we do have good operations. When something is actually regulated, you tend to follow it.

DR. SVIRBELY: I still wonder about this idea that a laboratory has failed if they don't get all the tests right.

MS. STRONG: Oh no, that is not necessarily true. Our goal is to work with these labs until they are able to get them right.

DR. SVIRBELY: For proficiency samples that I've seen in other areas it is not expected that a lab will get every single test right every time but there is a minimum expectation.

MS. STRONG: Right, we don't expect that either, but we want to be sure before we have people do work for us that they have corrected these deficiencies and found out why they didn't get it right before we proceed.

DR. DAVIES: We don't want to give them a 70 percent and say OK you have a 70-percent average on the audit samples, therefore you can analyze this like the EPA quarterly program. It's not going to work. We want to say "You know you did real well on this, but you did marginally on this, and let's see how we can get you to do well on this also."

DR. SVIRBELY: Something I feel really bad about is how we did on the proficiency samples I have seen so far. The feedback is in the chemistry meeting where we see how we did but what you really need is an overall program for how all the labs have done, a range - it may very well be that all the labs are low compared to you. It may be some problem with the sample.

MS. STRONG: Yes, I have not had a chance to actually analyze that data. All I had a chance to do was summarize it on the sheet. Now I will go back and look and make some statistical evaluations to see if there are some trends there, I have really just not had a chance to.

DR. SVIRBELY: I didn't mean just in terms of the Corps labs compared to each other. There are a lot of others outside the Corps labs that analyzed these same sediment samples and I have not seen the data coming back.

MR. ADAMS: You're not going to see the ranges on the true values for the audit samples.

DR. SVIRBELY: Why not?

MR. ADAMS: It's confidential.

DR. SVIRBELY: It shouldn't be confidential; it's very useful for monitoring the quality. Every other program I've ever seen always gave adequate feedback.

MR. ADAMS: We only have a minimum number of samples available to use for a sediment sample and all of the results are peer group analysis. They are not just one single laboratory analysis or spiked samples. They are environmental samples and the results are checked against a peer group result - not against any single sample analysis. So you are always being evaluated against a universe of laboratories which have evaluated that sample.

DR. SVIRBELY: There should be more accountability on your end for the samples. I mean if I'm going to know whether I have a problem or not I want not only what you say I did comparatively, I also want to see how everyone who took the sample did. This is the way proficiency tests are run in a toxicology laboratory in a highly regulated area.

MS. STRONG: Yes, but it's a lot easier to prepare those type samples than it is a sediment sample that's in the real world. There are only so many of those around that actually have all these contaminants that you can use for proficiency testing.

DR. DAVIES: We could do that if we spiked sand.

MS. STRONG: Yes, if you spiked sand, but you don't have a true sample when you spike sand.

MR. ADAMS: The point you are making is very well taken but we don't have the luxury of being able to do that - at least not at this time.

DR. SVIRBELY: The problem occurs if someone has gotten that sample right and they recognize that sample. Maybe they ran that last time; they have a head start in that they are already actually inside that sample.

DR. DAVIES: But they don't get the one they ran last time. We don't have just one; it's just that our possibilities of commuting those are so limited and if you let the results go, then the program is shot.

DR. SVIRBELY: But I am falling back to my original point that I started out with; that there is no adequate proficiency testing program for me to evaluate myself or how I've done.

DR. DAVIES: Well there are American Society for Testing and Material samples or NIST and others that you can buy.

DR. SVIRBELY: But those samples have total analysis so it is not as valuable as the samples you guys get.

DR. HEITKE: We were talking about water quality analyses and HTW analyses. I wonder to what extent the separate componency in headquarters is a problem in this regard. You know there is talk about the possibility of setting a directory for all environmental issues and I wondered if that were to happen if that would somehow bring these two sides together.

MS. STRONG: I think it would help, but that remains to be seen.

Laboratory Automation and LIMS Systems

Dr. Joe Solsky
Missouri River Division Laboratory

When I came on board about 5 years ago at the Missouri River Division (MRD), I was handed the usual slate of duties that a Chief Chemist would perform - scheduling laboratory operations, supervising analytical processes, reviewing data, and keeping up with funds. At that time we were still developing the hazardous and toxic waste (HTW) programs. With our increasing responsibilities as quality assurance (QA) laboratory for HTW work, we spend hours on data review and documentation both from our laboratory and from our contractors. We have the responsibility for insuring that the data were accurate, reliable, etc., making sure that all the reports were complete and reviewed, and making sure that all the work we had in was funded. You can't do work without proper funding. Also we had to insure that it was properly billed at the same time. We also got into a lot of archiving. We started getting a lot more work in and as the reports pile up, there is a lot of data—strip charts and chromatograms that you have to deal with; and of course all of the administrative duties, such as timekeeping, record keeping. As time went on, as the program and the sample load grew, the number of hours we were spending at the lab grew at the same time, going from 40 to 60 or more hours per week. About that time we decided that we had to do something about the situation. About 3 or 4 years ago, a group of people sat down at the lab and we proposed a laboratory automation system that would combine the administrative duties and the sample management duties at the same time. Essentially where we are now is implementing that plan.

So I'd like to share with you what we've done over the years - what's working, what's not working - some general ideas about automation in laboratories. I think a lot of people are under the wrong impression that when you go out and buy a personal computer (PC) or you buy a Laboratory Information Management System (LIMS) system, that all you have to do is plug it in and issue a couple of very simple commands and then "voila," you are automated. That couldn't be further from the truth. A lot of people also think that a computer will solve all of your problems and that everything should be automated from the computer. That is also far from the truth. A lot of things subject themselves very well to automation and there are other items that you are probably better off doing manually. The final system that we came up with is a combination approach. One approach just wouldn't do it and I'm sure a lot of the other Division labs are in this same type situation. One computer just simply will not do it. It is too vast a task. If you approach Hewlett-Packard (HP), Perkin-Elmer, or any other producer of this type of equipment, you will find that they may sell you a very good LIMS package, they may sell you a very good administrative package, but rarely do the two packages run together on one single CPU. It just simply isn't set up this way. So in our laboratory, we settled on two computer systems. One computer system identified as LAN is a local area network system and essentially this will track all of the administrative, record keeping, project information, cost information, billing information,

and timekeeping. We also identified a second system as the LIMS system, which is the sample tracking and reporting system. These two systems do share information back and forth in a gateway that we are now establishing between the two to eliminate dual entry of information.

In terms of the systems that we are now using, all of the hardware has been purchased and all of the software has been purchased. It is currently being implemented. Our LAN system has been up and operational in a trial mode for about a year and a half. So we are now modifying it to try to make it more user friendly so that more people can interact with it and we can use it for more tasks at the same time. The local area network is simply a network of PCs linked to a 386 file server operated by a software package called Revelation. At the time we chose this, we already had a couple of people at MRD using Revelation who were familiar with it. It is very similar to a package like dBase IV or others that are on the market. In our case Revelation suits itself very well to administrative tasks, whereas packages like Oracle, or dBase suit themselves better toward data type applications. If you look at any of the summaries that compare databases and their structures and usabilities, you find this generally to be true.

Basically the computer system used for our LAN system is a 386 file server with a 400-megabyte hard disk system. Presently we are approaching capacity on that system because of the large number of projects that we track, so we will probably be increasing our disk storage space. Since we now depend so heavily on this system, a very organized system or structure for backups becomes critical. Our system is backed up automatically overnight at least twice a week. All the local PCs are backed using a mountain tape hardware cartridge at least once a week for any critical information that people may have downloaded onto their own systems. For this particular approach we have maintained the individual user's needs allowing them to use their own software so they can customize their own PCs and use them any way that suits them best. At the same time the critical information that must be shared between the sections and correlated into the local area network can now be processed and transferred into a central system and tracked and manipulated accordingly using the Revelation database.

We have essentially two software packages that we are setting up (Figure 1) in our LAN system. FAMIS is our financial and administrative management information system and SAMIS is our sectional and administrative management information system. So each of our sections has a package that deals with them in terms of their specific needs. We have three different chemistry sections even within our own lab with three different software versions. We find that what is applicable to our HTW work may not be applicable to our water quality work or our paint and other materials work. Even within our own lab we use different programs to track and deal with information. It was easier and more in tune with what our analysts were already doing to keep the separate systems.

For the LIMS system, which is now operational in a trial mode, we purchased an HP-1000 system from Hewlett-Packard and it is equipped with LABSAM with all the frills

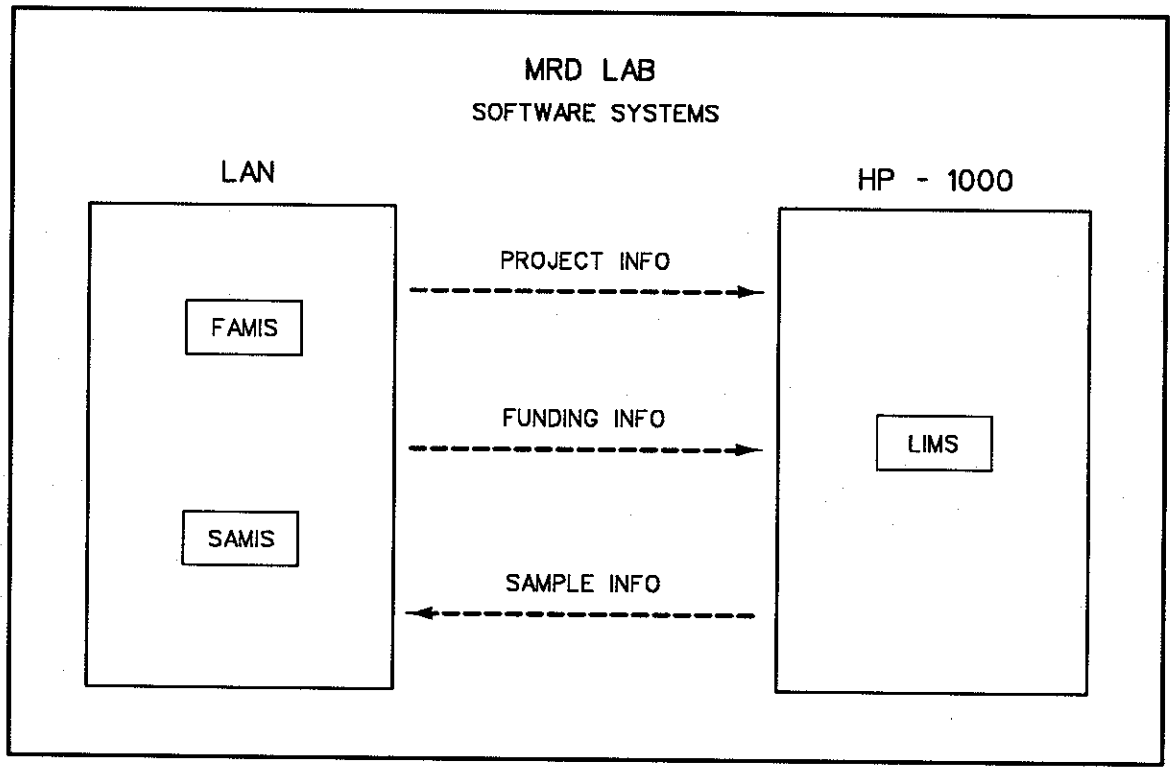

Figure 1. Software packages in LAN system

that go along with it. For the hard drive capability we have a little over 1 gigabyte of hard disk space and because of the necessity for backup, we have two separate hard disk drive systems. Each hard drive system is 571 megabytes of on-line data storage. We opted not to go with the District or Division mainframe computer because of the lack of interactibility with the system. We wanted a real-time interactive system. A lot of the issues that we deal with on a day-to-day basis require us to query that database. You need an answer immediately - something that our mainframe system just would not give us.

We have a separate room set up for this particular system because as you start getting bigger and bigger with these systems they become more susceptible to the environment. Even though I have seen them sitting out in the lab in some places, it is not recommended. They should be isolated from your instrumental and wet chemistry areas. We already have a lot of PCs in our laboratory that are breaking down as a result of exposure to fumes from organic and acid vapors. Even though the PCs have filters on them, we find that the filters do not stop many of the fine dust particles that are generated in our building and the fumes that are generated go right through. We have had a number of PC failures simply because of this. So for the LIMS system, because of its importance to our operations, we have set aside a separate room with temperature and humidity controls. Also we have a non-interruptable power supply that is actually bigger than the CPU and the disk drives together. This is to insure that if our power does go down, as it does in our downtown location, that room will go on as if nothing has happened. We have a 15-KVA UPS power supply on it.

When we were initially investigating LIMS systems, we also looked at those operating on PCs such as the 386 or 486 machines. There is no reason that a moderate to small size lab could not implement a system like ours on a smaller CPU. But considering the volume of work we have and the plans for this particular system and the number of inputs and outputs from this system, the smaller units tend to bog down when you try to extract information out or put information in. Data transfer becomes very important and this is when you go to your larger mini-computer as your main system. We currently have 24 devices networked into this system. To do that on a PC would be very difficult to do. We have nine printers and two data lines going into the system. When you have that much communication, you have to go to the larger systems. Even the 386 and 486 cannot handle that kind of input-output.

With regard to the FAMIS system (Figure 2), another key point that we wanted to consider was that we wanted to be sure that these systems could talk to each other. A lot of the information collected during sample log-in is very necessary to the administrative system. We get numbers of coolers in on any given day and one of the criteria that we must establish immediately is if the project is funded. Our upper management frowns on me contracting work out the same day that we get samples in, but you have to because of the holding times. You can't sit around 3 or 4 days and establish funding, you have to deal with it right now. Otherwise the samples go beyond holding times and people in the field don't like being told they have to resample simply because your computers couldn't talk to each other. As the sample information is logged in, it is

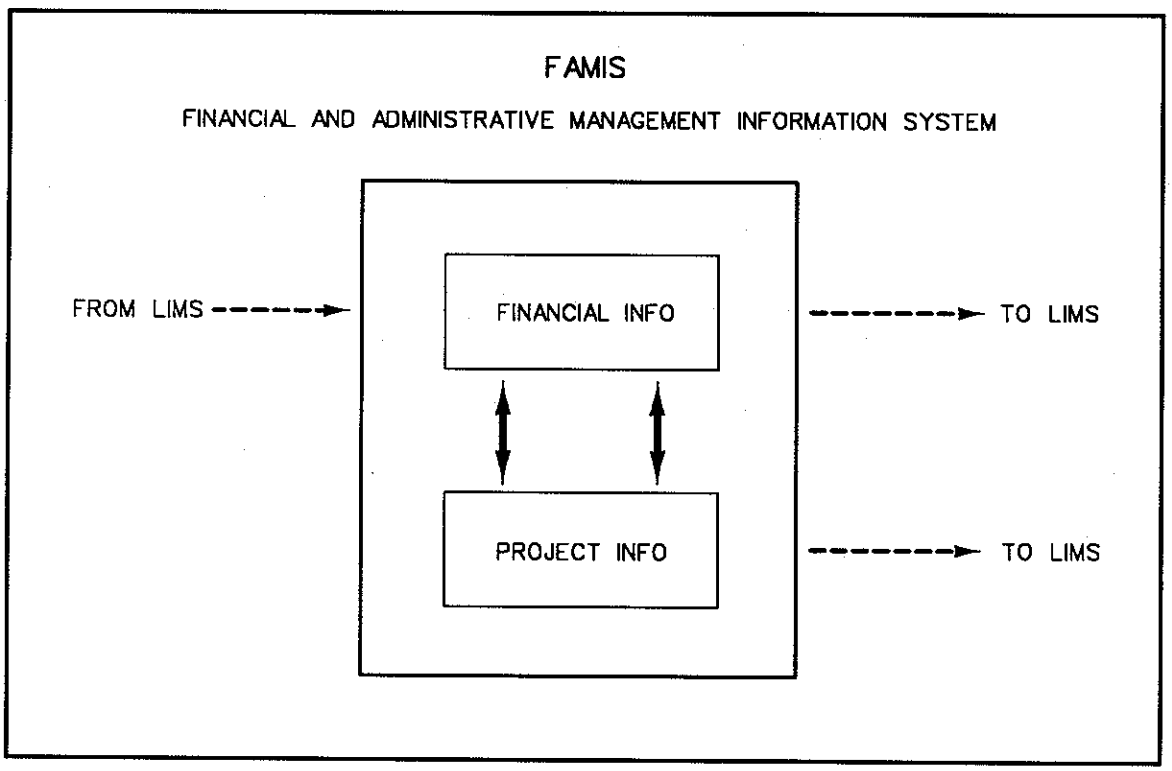

Figure 2. FAMIS system

transferred over to our FAMIS system and it looks at our various accounts to see if we have funds to cover this. If not, the log is stopped and appropriate phone calls are made at that point in time. The important thing is that we know the financial status immediately at log-in. Some of these projects are very big, $200,000 to $400,000. It is not uncommon in any one day to receive $50,000 of work. To track that and keep up with funds on a day-to-day basis is very important. So these gateways are extremely critical between the two systems. This is proving to be one of the more difficult problems - establishing this gateway. They are two entirely different systems and the protocols are a little unique. When we called Hewlett-Packard, they were a little resistant to giving us their proprietary connection type software information because they wanted us to pay them to come in and do it. We said "No," we want to understand how to do it ourselves because our situation is unique. They finally agreed and we proceeded to set up the gateway. We still haven't completed this in its entirety but those bugs should be ironed out in the next month or two.

In terms of the LIMS system (Figure 3) there is a lot more than is shown here. In addition to the sample tracking, we have samples coming into the system and reports coming out. LIMS is a laboratory information management system. It tracks work, it tracks your samples. Where are they? For small laboratories that don't have a great deal of work, such a system may not be necessary, but when you get in as many as 800 individual containers in one day, it is essential. Without it, you would be lucky to get all the samples logged in in one day, much less tell your analysts or contractors what is needed.

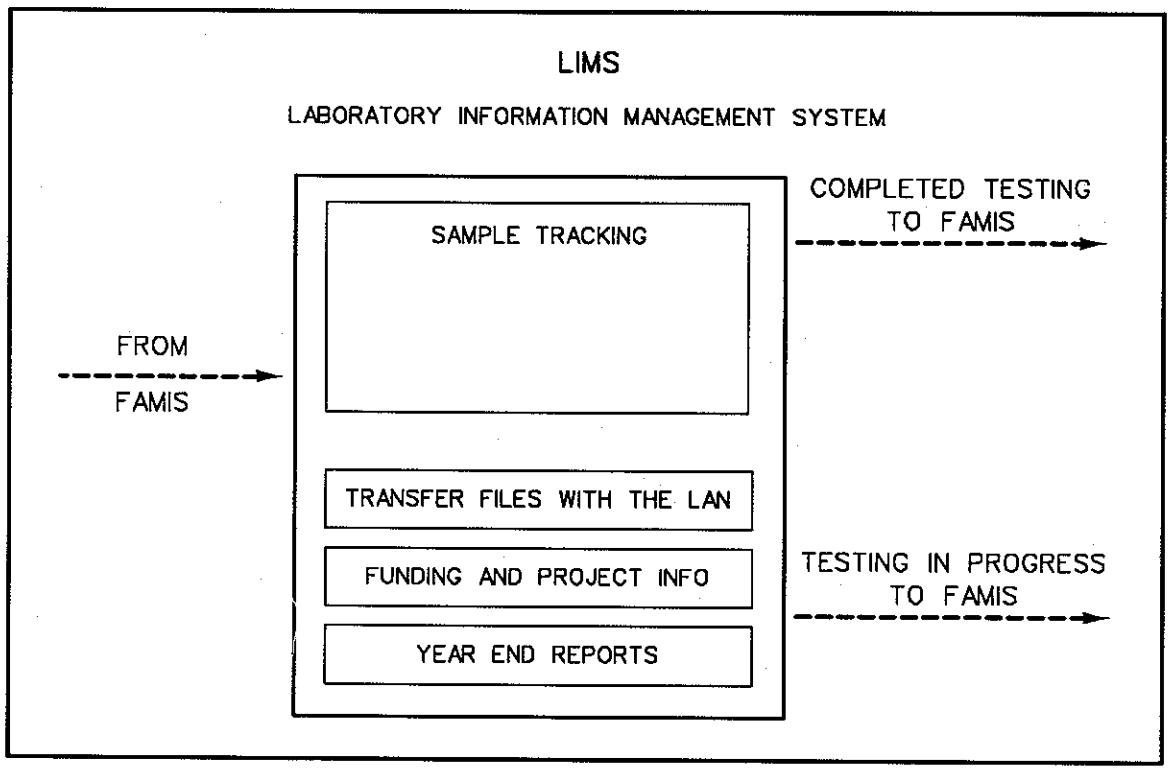

Figure 3. LIMS system

In addition to the sample tracking, the LIMS system tracks the work, the data, and the testing results. There are a number of approaches to implementing a LIMS system in an analytical testing laboratory. Sample tracking is pretty obvious, but there are a number of schemes to link instruments up. How automated do you wish your laboratory to be? Do you want your instruments to be totally controlled by LIMS or do you want them independent? After you get the data, do you want the data to be auto-transferred to LIMS or do you want to manually manipulate that data? There are a lot of choices that need to be made up front before you buy a LIMS system. If you don't do your homework, you may wind up with a very expensive computer that just sits in the corner because it was not configured to your needs. Before we bought our system, three people from ADP and I went around the country visiting sites that were similar in size to ours. We asked questions about their systems and advantages to their approach or problems they had with their systems. I have seen cases where people bought these systems,spending $100,000 to $200,000, and then they gathered dust simply because they did not work for their particular situation. That's not the purpose of a LIMS.

The approach that we chose to tie the LIMS to our instruments is the following: LIMS feeds no information to our instruments. We elected to cut that link. We are not a production laboratory. It is not our job to run 100 or more of a sample day to day. We are a QA laboratory. As such, we don't want a totally automated laboratory. We want some operator oversight. We want some operator input. We don't want the computer telling us what to do. We want to tell the computer what to do. So we broke that link in the system. Hewlett-Packard didn't like us very well for doing that, but we did not want data to go from LIMS to the instruments.

QUESTION: What sort of data are you talking about?

DR. SOLSKY: Basically you can take it to the extreme. If you buy a Hewlett--Packard GC, these things can be programmable. Given a data link, you can pass down to it such things as injection settings, column temperature settings, and auto-sampler configurations. If you are running the same type samples continuously, that might be an advantage. We feel that for QA purposes, more operator input is needed.

MR. GOUDA: You're saying that you don't want the LIMS telling the instruments what to do?

DR. SOLSKY: That's right, but all of the instruments will be linked to LIMS for uploading. We have elected to have individual computers dedicated to each instrument for operation. In some cases it controls the instrument, in others it does not. When we buy any new instruments, we buy them with this configuration in mind. I want independent work stations that are not dependent on LIMS to get the job done. What if LIMS goes down? It's a big computer and will malfunction occasionally. They told us to expect CPU failure between one and two times a year. In this case the instruments can continue to operate.

The master data file resides in LIMS. After the analyst gets the data in the format he wants, at that point in time the data is transferred to LIMS in the appropriate configuration.

I'd like to go back to the FAMIS and SAMIS systems and show you one of the billing reports (Figure 4) put out by the system. The charges are broken down into the various categories. It shows the individual tests and services that we charge for. If work is sent to a contractor, this is indicated. If there are problems with the samples and we have to spend hours coordinating with the people in the field, our time is charged to the project and so on. All of these charges are done for us automatically based on information fed in at various times in the receipt and analysis process.

Going back to the LIMS system, as samples come into the laboratory, the first item of concern is the log-in screen. The system that we chose is a custody type of system. It tracks all entries no matter what you do. If you make a mistake, it will flag you and ask why you are making this correction. It will date and time-stamp the entry, so I have a complete chain of custody within the computer system itself. Any errors are thoroughly documented. All sample information will be recorded so that in the event that we have to go back and reconstruct the analytical process, all of the information will be readily available. A description of the sample with all accompanying information is recorded. Preservatives are checked. Any discrepancies are noted. And finally we are ready to give the sample a number. The computer will spit out a bar-code label based on the information given. Our bar-code menu (Figure 5) immediately documents the sample category, i.e., HTW, water quality, paints, etc. Based on this entry a second customized bar-code menu appears that identifies preservatives, media, and sample containers. A job-codes menu (Figure 6) categorizes the analysis. So up to this point this system has produced a complete audit trail from the time of receipt to the time of analysis.

QUESTION: Did you say this system was developed by HP?

DR. SOLSKY: What HP gives you are unprogrammed modules that you have to customize to fit your particular needs. If you do go out and purchase a LIMS system, be prepared to devote the manpower to set it up. We have had two people full time, one chemist and one ADP person, for about 9 months and we are just now bringing it on board. We expect that before it becomes fully operational, 1 to 2 more years will be spent with two people working full time. I personally would not recommend trying to set up a system unless you are willing to devote the necessary manpower to do it right.

The LIMS is a sample tracking system. From the time the samples are received until the chemist is ready to begin analysis, only the sample custodians have handled the samples. The chemist checks out the samples from the sample custodians and this is entered into the computer. Based on the analysis request, the chemist is ready to proceed to phase two of the system and set the computer up for analysis. Another bar-code menu (Figure 7) for the instrumentation is used. The chemist will tell the computer that he wants to do specific analysis that day. This will trigger the computer into a certain quality control (QC) mode. In this mode the computer will recommend certain QC

REPORT OF TESTS COMPLETED

05-19-90

DISTR./DIV.: **OMAHA** MRD LAB NO.: **90/52** MINI-LIMS NO. **368**

DATE OF TEST REQUEST: **09-28-89** COST CODE: **RA0427909969103**

TEST REQUEST NO.: **ENE 9585** PROJECT NAME: **HILL AFB;OPERABLE UNIT 1**

CONTRACT NO.: LOCATION: **UT**

TYPE: **DERP**
SUBTYPE: **IRP-AF-LOG**

TESTS COMPLETED

SUBJECT

DATE OF REPORT OF TRANSMITTAL	CODE NO.	BRIEF DESCRIPTION	QUANT.	UNIT PRICE	UNIT	AMOUNT
	HC-8A	CONTRACTOR TESTING-EHR	20.00	$45	HOUR	$900.00
	HC-24	PROJECT COORDINATION	5.00	$45	EACH	$225.00
	HC-6	SAMPLE LOG-IN	9.00	$45	HOUR	$405.00
	HC-7	SAMPLE SHIPPING $ HANDLING	2.00	$45	HOUR	$90.00
	HC-49	MISCELLANEOUS SERVICES	61.11	$1	EACH	$61.11
	HC-3	OTHER HAZARDOUS WASTES A	14.00	$45	HOUR	$630.00
	HC-39	NITRATE OR NITRITE	12.00	$15	EACH	$180.00
	HC-30	CHLORIDE	4.00	$10	EACH	$40.00
	HC-36	FLUORIDE	4.00	$37	EACH	$148.00
	HC-44	SULFATE	4.00	$18	EACH	$72.00
	HC-12	VOLATILE ORGANICS (GC MS)	4.00	$300	EACH	$1,200.00
	HC-21	PETROLEUM HYDROCARBONS	1.00	$200	EACH	$200.00
	HC-22	FUEL I.D.	3.00	$75	EACH	$225.00

TOTAL BILLED FOR THIS PROJECT **$4,376.11**

Figure 4. Billing report for FAMIS and SAMIS systems

HTW
Hazardous & Toxic Waste Chemistry

WQ
Water Quality Chemistry

PAINTS
Paints & Materials Chemistry

SOILS
Soils Section

PETROGR
Petrographics Section

CONMAT
Concrete & Materials Section (CNM)

QC
Method QC Samples

Figure 5. Bar-code menu for MRD Lab Section

YES

NO

HOLD

CANCELLED

HC-8A
EHRT

HC-34
CYANIDE

HC-14
PCBS

HC-37
OIL & GREASE

HC-8B
TVA

HC-36
FLUORIDE

HC-15
PEST

HC-20
TRPH

HC-8D
IT CORP

HC-39
NO2/NO3

HC-16
PEST/PCBS

HC-21
MOD. 8015

HC-40
PHENOL

HC-44
SO4

HC-13
EXP, HIGH

HC-22
FUEL ID

HC-47
TKN

HC-45
SUS. SOLIDS

HC-26
EXP, LOW

HC-18/27
AA METALS/
DIGESTION

HC-35
DISS. SOLIDS

HC-48
PH/TURBIDITY

HC-17/18/19/27
ICP METALS/
DIGESTION

HC-30
CHLORIDE

HC-12
VOA

HC-19
Hg

HC-32
COD

HC-32/47
COD/TKN

HC-35/45
TDS/TSS

HC-28/30/44
ALK/Cl/SO4

HC-28
ALKALINITY

Figure 6. Job codes menu

Q-LC1
HP1090
EXP (HC-13/26)

Q-MS1
HP5890/5970B
VOA (HC-12)

Q-GC1
Perkin Elmer S3B
PEST/PCB (HC-14/15/16)

Q-IR1
BIORAD FTIR
TRPH (HC-20)

Q-LC2
Reserved

Q-MS2
Reserved

Q-GC2
HP 5890
TPH/FUEL ID (HC-21/22)

Q-IR2
Reserved

Q-UV1
Perkin Elmer LA 3840
CN (HC-34)

Q-CO1
Lachat System IV
Aqueous ions (HC-39/etc.)

Q-GC3
Perkin Elmer 8500
HERB (HC-15/WQ-19)

Q-PH1
Fisher 805 MP
pH (HC-48)

Q-UV2
Reserved

Q-CO2
Technicon AutoAnalyzer II
Aqueous ions (HC-39/etc.)

Q-GC4
HP 5890
HERB (HC-15/WQ-19)

Q-CD1
YSI Model 34
Conductivity (HC-48)

Q-IP1
Leeman Labs ICP
HSL metals (HC-17)

Q-GF1
Instrumentation Lab (AAGF)
HSL subset (HC-18)

Q-HY1
Instrumentation Lab 440
As/Se (HC-18)

Q-CV1
PSA/Herlin (AACV)
Hg (HC-19)

Q-IP2
Reserved

Q-GF2
Reserved

Q-HY2
Reserved

Q-CV2
Reserved

Figure 7. Bar-code menu for instrumentation

samples to be run (Figure 8). So it is now up to the chemist to configure the computer file and tell the computer exactly what is going to be run based on what is on the menu. At this time we are setting up the protocols for minimum QC to be run for the various analyses. This is not to restrict choices, and overrides are always available. If there is an override, the computer will indicate this fact and why the QC was not done according to protocol, thus providing an appropriate audit trail.

Now the chemist will exit the LIMS and set up his instrument based on the configuration that he just set up in the LIMS. The computer now has a dummy file and is expecting results back for all the samples and QC checks. We expect the chemist to then produce as good data as possible before entering it back into the LIMS. Calibrations, samples, and checks will be rerun if necessary to provide good data. He is the expert, not the computer, and will determine what looks good and what does not. When he feels that the data are acceptable, he calls up the computer screen and enters the data. All raw data are kept on the local computers unless it is a control sample. At this point, we call this Level I validation or validation by the analyst and the group supervisor. Then we punch up the data to the computer, where it will double-check all computations. If anything is outside the acceptable QC ranges, it will spit the data back at you. Again this can be overridden with appropriate supervisory approval, but this will be reflected in the audit trail. So it will be difficult to cheat, not impossible, but difficult. The computer will then plot your control charts for you. Also we have sample custodians who will feed in blind check samples and the computer will check those against expected values. Even though the analyst has included his own QC samples, he could be wrong and this gives another check from outside the analyst's sources. These samples are logged in by the sample custodians as regular samples, so the analyst is not aware that they are check samples.

So after all the data have been entered back into the LIMS system and all the checks have been made, the data report can be printed out in whatever format the customer wants. Frequently the customer is only interested in the final number and is not interested in all the accompanying QC data. All customers are given ID numbers and they can call in and get the status of their samples at any time.

The LIMS also has a variety of other options. It will generate the typical backlog of samples and we are now using it to generate field usable barcode labels. I empathize with the person yesterday who was having problems finding a barcode label that will stick on a bottle. If anyone knows where we can obtain them, please let me know.

These LIMS systems are very powerful and very usable, but they are not for everybody. They are very good systems, but they take a lot of manpower to set up correctly.

IBL
Instrument Blank

MBL
Method Blank

MSPK
Method Spike

MTRX-DUP
Matrix Duplicate

MTRX-SPK
Matrix Spike

MTRX-SPD
Matrix Spike Duplicate

LCS
Laboratory Control Sample

PA
Performance Audit Sample

ICS
Interference Check Sample

CRDL-STD
Contract Req. DL Standard

ICB
Initial Calibration Blank

ICV
Initial Calibration Verification

CCB
Continuing Calibration Blank

CCV
Continuing Calibration Verification

STD
Instrument Standard

OTHER
Other method QC sample type

Figure 8. Bar-code menu for QC sample types

Discussion Session

Ms. Ann Strong, Moderator
US Army Engineer Waterways Experiment Station

MR. ADAMS: I'd like to ask Dr. Ajmal Ilias from North Pacific Division (NPD) to bring us up to date on their use of the NPD-modified 8015 method that they have been using to answer questions not resolved when using the total recoverable petroleum hydrocarbon (TRPH) procedures to analyze samples from Defense Environmental Restoration Program sites and underground storage tank (UST) sites.

DR. IIIAS: The NPD-Modified 8015 method was developed to answer a lot of questions that the Alaska District had about samples. They came to us and complained "We smell it, we see it, it's floating, but TRPH Method 418.1 says nothing is there. I can't believe it." So we told them to let us look into it and see if we could come up with something. I discussed the problem with our contract lab people and our in-house lab people. They all agreed that they did not get any petroleum products when they extracted with freon. So we switched back to a methylene chloride extraction and the methylene chloride extraction so far has been successful. Then with the generosity of the Alaska District, they collected samples for analysis by both the methods, the NPD-Modified 8015 and 418.1. We compared results for about 6 months and we always got better agreement with the field estimates using Modified 8015 as opposed to 418.1. This method gives additional information and classifies gasoline, kerosene, and diesel and to a certain extent will give you diesel-1 or diesel-6 or jet fuel-1 or jet fuel-6, or whatever number. I have distributed the method to many Districts and several states. We received comments from the State of Oregon that this is the first time that they have seen a method that would give this kind of comprehensive detail. The State of California did not reply on it.

DR. HEITKE: Is the major difference in the procedures the extracting solvent?

DR. ILIAS: No, it is quantitation and characterization.

DR. DAVIES: One method is IR and the other is GC.

QUESTION: Is this similar to the California method?

MR. ADAMS: The California method suggests a number of solvents to be used for the extraction. The first solvent that they suggest is carbon disulfide. The reason for that is that it doesn't absorb in the infra-red whereas some of the other solvents would. A number of laboratories are now using that. There have been many fires and nobody likes it who is doing the extraction. So one day I called the guy in California who developed the procedure and he said "Oh no, you shouldn't be using carbon disulfide!" Of course the method that they put out on the street has carbon disulfide in it, so we're looking for a new "Standard Modified 8015." We need a new standard for the analysis of total hydrocarbons in soils. Quite frankly, the TRPH measurement that we make, Method 9071/418.1, is quite adequate for most purposes. It does pick up most of the petroleum hydrocarbons that we are interested in for soils since most of the under-

ground storage tanks that we look at have been under the ground for 50 years and haven't been used for 30. This is not always true, but usually it is. There are not a lot of volatiles left and the 8015 method deals mostly with the more volatile compounds since you cut off the analysis after about 25 min and most of the good stuff or stuff you find in the older tanks doesn't come out for about an hour.

DR. HEITKE: I'm assuming then that what Ajmal could see and smell was volatiles.

DR. ILIAS: That's correct.

MR. ADAMS: The TRPH method does lose a significant portion of the volatile compounds, less than C_8, which is about half that normally found in gasoline. The procedures do state their limitations. Another thing to be considered is the need to get away from the freon extractions. It's becoming too expensive to use, it's environmentally not the thing to use, and it won't be available much longer. The Environmental Protection Agency (EPA) Office of Methods Development is considering a standard for this analysis which would include a perchloroethylene extraction.

DR. ILIAS: I would like to comment on the Modified 8015 put together by Mike Woster at Missouri River Division (MRD). The carbon disulfide extraction and the preservative of the sample is tedious and unsuitable. Shipping the samples with carbon disulfide is not allowed. Federal Express will not ship samples with dry ice.

MR. SNITZ: I wanted to raise another question on a different subject. Our contracting officer in Detroit District, supported by the Office of Counsel, has mandated that we use the A/E selection process when contracting for field and laboratory services. The Buffalo District does not and probably hardly anybody does. So, either we are illegal or everybody else is illegal. I'd like to know who is.

MR. BALIFF: I think it gets back to who your contracting officer is. The US Army Toxic and Hazardous Materials Agency, for example, uses a different approach. They use service contracts for most things. Some Districts will look at the same work and decide they have to go through an A/E; others will decide to use service contracts. It's a case of procurement people interpreting the same things differently and coming to different conclusions.

MS. STRONG: It may be a case of who audited them last and the recommendations made by the audit team.

MR. SNITZ: Well, I don't like the inconsistencies. I really would prefer not to have to go to an A/E for analytical services.

MR. BALIFF: The same thing occurred within the MRD for incineration contracts. Kansas City chose to take one approach and Omaha went the other way with the same set of circumstances. It seems that each contracting Division has their own culture and way of doing things.

MR. SNITZ: This inconsistency points out to me that, in theory, you should be able to go to your counsel and tell him how you wanted to do it and he could interpret to suit your needs. However, he seems to operate in his own castle.

MR. BALIFF: Your procurement guy wants to do the most conservative thing or at least your counsel wants to do the most conservative, unless they have some type of programmatic restraint.

DR. HEITKE: Getting back to the methods for hydrocarbon analysis, have you investigated the GC/MS method for volatiles analysis and sparging for a longer time? I know a guy operating a lab in Pennsylvania who maintains that if you sparge something long enough you can get almost anything out.

MR. KARN: I have done some analysis for hydrocarbons that way and it does work, you just have a longer run time.

DR. HEITKE: I should say one thing that you accomplish when using this approach is that you don't have solvent problems. It's also a waste minimization type methodology.

DR. SOLSKY: When we receive samples that require extraction for fuel hydrocarbons, we still use carbon disulfide. But if we receive a sample that is also slated for both volatile and extractable hydrocarbons, then we frequently use headspace analysis which is similar to the approach that Bruce suggested. It does get around the problems mentioned. I can see up to C_{20} using headspace. We take the temperature up to a constant 40° C and using a splitter, inject into the GC.

DR. ILIAS: What about the methods using supercritical fluid chromatography?

DR. DAVIES: EPA says that they are still in the developmental stage and won't be ready for several years.

Environmental Laws and Regulations - A Review

Ms. Ann Strong
US Army Engineer Waterways Experiment Station

My talk this morning is a review of the environmental laws and regulations and their interaction with Corps programs. In 1969 the first major piece of legislation was passed that affected government agencies. This was the National Environmental Policy Act (NEPA) and set forth our national policy for protection of the environment. It established policies, set goals, and provided the means for carrying out policy. NEPA ensures that environmental information is available to public officials and citizens before actions are taken and requires the preparation of environmental assessments and environmental impact statements for projects with potential environmental effects. NEPA applies to both hazardous and toxic waste (HTW) programs and civil works programs.

Currently HTW projects have the highest visibility for environmental projects in the Corps. In the late 70's and early 80's the Corps became involved with HTW projects as part of the Installation Restoration Program. This was before the passage of the Comprehensive Environmental Response, Compensation, and Liability Act (CERCLA) and the creation of the Defense Environmental Restoration Program (DERP), and prior to the Memorandum of understanding (MOU) between the Environmental Protection Agency (EPA) and the Corps to investigate Superfund.

CERCLA was passed in 1980 with the following objectives:

a. To develop a comprehensive program to set priorities for cleaning up the nation's worst sites.

b. To clean up abandoned hazardous waste sites.

c. To make responsible parties pay for those cleanups wherever possible.

d. To set up a hazardous waste trust fund (Superfund).

e. To advance scientific and technological capabilities in waste management.

f. To respond to "hazardous substances" spills.

Even after a law is passed, it usually takes 18 months to 2 years to develop regulations to implement the laws. Regulations are usually proposed first and published in the Federal Register, allowing the public time for comment and input. After the regulations are finalized and become effective, they are published in the Code of Federal Regulations (CFR). The regulations to implement CERCLA are contained in Title 40 of the CFR, parts 300-311.

CERCLA defines hazardous substances as (1) any substance designated under section 311(b)(2)(A) or any toxic pollutant listed under section 307(a) of the Federal Water Pollution Control Act, (2) any hazardous waste having the characteristics identified under or pursuant to the Resource Conservation and Recovery Act (RCRA) #3001, (3) any hazardous air pollutant listed under section 112 of the Clean Air Act, or (4) any im-

minently hazardous chemical substance or mixture for which the Government has taken action under section of the Toxic Substances Control Act (i.e., polychlorinated biphenyls (PCBs)). All hazardous substances are listed in a table in 40 CFR section 302.4 together with a reportable quantity. If it is also an RCRA waste, the RCRA waste number is given in the table.

In 1986, Congress passed the Superfund Amendments and Reauthorization Act (SARA) containing the following:

TITLE I Major changes and additions to CERCLA.

TITLE II Aspects relating to underground storage tanks, required the Department of Defense (DOD) to establish DERP, and create an R&D demonstration program for hazardous waste.

TITLE III Creation of contingency plans and community right-to-know.

TITLE IV Investigation of radon gas and indoor air quality.

TITLE V Redefined revenue sources (Superfund and LUST trust fund).

The National Contingency Plan (NCP) contained in 40 CFR, Part 300 is the regulation to implement CERCLA and SARA. It requires DOD to use the same NCP regulations as those used at other Federal facilities and non-government agencies. It requires Federal agencies to enter into an Interagency Agreement with EPA for the completion of all remedial actions. Any disputes are to be handled by OMB under Executive Order 12580. The NCP states that under CERCLA, cleanup remedies must be protective of human health and the environment and comply with other laws that are appropriate, or relevant and applicable - hence the term ARARS (appropriate, relevant, and applicable remedies).

In 1976 Congress passed the RCRA which was a rewrite of the Solid Waste Disposal Act of 1965. RCRA covered the following topics: (1) general provisions, (2) established the Office of Solid Waste and defined the authorities of the EPA Administrator, (3) dealt with hazardous waste management - introduced the "cradle to grave" concept, (4) provided for State or Regional solid waste plans, (5) outlined the duties of the Secretary of Commerce in resource recovery, (6) outlined Federal responsibilities, (7) contained miscellaneous provisions, (8) provided for research and development demonstration and information, and (9) dealt with underground storage tanks.

The Federal regulations implementing hazardous waste management under RCRA are contained in 40 CFR Parts 260-271. These cover the following:

Part 260 General requirements, definitions, petitions.

Part 261 Identification and listing of hazardous waste.

Part 262 Generators of hazardous waste.

Part 263 Transporters of hazardous waste.

Part 264 Interim status hazardous waste facilities.

Part 265 Permitted hazardous waste facilities.

Part 266 Certain specific hazardous wastes and facilities.

Part 267 New interim status land disposal facilities.

Part 268 Land disposal restrictions.

Part 270 EPA-administered permits.

Part 271 State hazardous waste program requirements.

Since all laws are subject to change, in 1984 Congress passed the Hazardous and Solid Waste Amendments (HSWA) to amend and modify the requirements of RCRA. Some major changes were in the regulation of underground storage tanks. HSWA also enlarged the authority extended to private citizens to bring suit against any facility (both private and government) for failing to comply with RCRA.

The Occupational Safety and Health Act as regulated in 29 CFR, Part 1910 requires 40 hr of training for HTW workers. It seeks to assure safe and healthy working conditions for every man and woman in the nation. Consequently, no Corps employee is allowed to work on an HTW site without the appropriate training.

At one time Federal agencies (and specifically DOD) were exempt from many of the regulations contained in the many environmental laws and regulations. However Executive Order 12088 required Federal compliance with pollution control standards and Executive Order 12580 implemented Superfund.

In addition to compliance with Federal environmental regulations, the Corps must also comply with Army regulations. AR 200-1, Environmental Protection and Enhancement, sets forth the objectives policies, and Army responsibilities for (1) the R & D program, (2) Water Resources Management Program, (3) Air Pollution Abatement Program, (4) Hazardous and Toxic Materials Management Program, (5) Solid and Hazardous Waste Management Program, (6) Environmental Noise Abatement Program, (7) Oil and Hazardous Substances Spill Control and Contingency Plan, and (8) Environmental Pollution Prevention Control and Abatement at DOD facilities. Another Army regulation, AR 200-2, Environmental Effects of Army Actions, is used to implement NEPA.

Within the Army, the Corps has additional regulations and these are called Engineering Regulations (ERs). Two of these have specific relevance to HTW work. ER 385-1-92, Safety and Occupational Health Document Requirements for Hazardous Waste Site Remedial Actions, establishes procedures for developing site safety plans and related safety and occupational health documents. ER 1110-1-263, Chemical Data Quality Management - Toxic and Hazardous Wastes, is probably the one that we are most familiar with. It sets forth the Corps quality assurance (QA) policy for HTW projects.

There are many other Corps programs and projects that are impacted by environmental regulations. The Federal Water Pollution Control Act passed in 1972 and amended by the Clean Water Act of 1977 had as its objective to restore and maintain the chemical, physical, and biological integrity of the nation's waters. This is primarily

achieved through the control of discharges of pollutants to navigable waters with the National Pollutant Discharge Elimination System (NPDES) permits. Section 404(b) specifies that any proposed discharge of dredged or fill material into navigable waters must be evaluated through the use of guidelines developed by EPA and the Corps of Engineers. The Corps is responsible for issuing the permits.

Water quality criteria were developed to assess the environmental impact of pollutants. They were revised in 1986 with substantially lower levels in many cases. Although the criteria themselves have no legal status, they are used by the EPA and the States to make decisions.

Another law directly affecting Corps operations is the Marine Protection, Research, and Sanctuaries Act of 1972, more commonly known as the Ocean Dumping Act. This act provides for protection of our oceans. Section 103 specifies that all proposed operations involving the transportation and dumping of dredged material into ocean waters have to be evaluated to determine the potential environmental impact of such activities using criteria developed by EPA. The Corps of Engineers is the permitting authority.

Water resource projects for flood control, navigation, and water supply require environmental assessments under NEPA. When making these assessments, all environmental statutes must be considered (i.e., the Clean Water Act, the Marine Protection, Research, and Sanctuaries Act, the Toxic Substances Control Act, the Endangered Species Act, the Safe Drinking Water Act, etc.)

The Safe Drinking Water Act was passed in 1976 and amended in 1986. EPA developed maximum contaminant levels for both groundwater and surface water. These were set as close as possible to the maximum contaminant level goals which are solely based on health effects.

The Toxic Substances Control Act has tremendous impact on both Civil Works (dredging) and HTW projects because it has jurisdiction over PCB contamination. Special disposal requirements apply if the concentration is over 50 ppm.

We should all become familiar with the basic applications of these laws and regulations and their relation to Corps projects.

On-Site PCB Analysis at Kodiak, Alaska, March 1981

Mr. Bill Saner
New England Division Laboratory

Before coming to work with the Corps, I worked with the US Coast Guard. We had a project in Kodiak, AK to clean up a Coast Guard base contaminated with polychlorinated biphenyls (PCBs). Because there were no available chemical analysis laboratories in the area, we were charged with equipping a mobile laboratory and transporting it to the site. Fast analytical turnaround was needed to monitor the remediation efforts.

Our laboratory was equipped with a gas chromatograph with an electron capture detector (GC/ECD), a high performance liquid chromatograph (HPLC) and a thin layer chromatography system. Instruments were cushioned and bolted to the floor to eliminate shipping problems.

Samples were comprised mostly of soil and cement samples, along with a small proportion of transformer oils. The sample preparation procedure consisted of air-drying any wet samples overnight in disposable aluminum plates. Since all cement samples were hand-chiseled from the floor of various government buildings, a heavy metal piston/cylinder was used to pulverize the chips to a much smaller size.

Samples were extracted using a sonicator to disperse the samples into hexane for PCB analysis by GC/ECD and into methanol for HPLC analysis. The GC was the primary analytical instrument, and the HPLC was used as a backup. However when samples exceeded the capacity of the GC, the HPLC was also used for analysis. No sample concentration was performed; samples were injected directly. The thin-layer chromatography system was used to pre-screen samples for high PCB content in order to prevent saturation of the GC/ECD detector.

PCBs had penetrated the concrete as much as 6 in., so extensive remediation was needed in some areas. The presence of an on-site laboratory such as this one allowed fast turn-around of results so that all the previous day's samples were reported by close of business the following day. This allowed near real-time monitoring and greatly facilitated the cleanup effort.

UST Sampling, Analysis, and Site Regulations

Mr. John Adams
Missouri River Division - Chemistry Review

My talk today deals with the Corps' involvement with underground storage tanks (UST) and the regulations that govern our actions at these sites. Most of these sites are located on formerly used defense sites or at currently operating military installations.

Most of the sites contained some sort of diesel fuel or fuel oil used for heating. Most of those tanks are not even regulated under the Federal regulations because they are too small and they were not used for the sale of the product. Although most of the tanks that we use do not fall under Federal regulations, we treat them like they are and go through the full-blown investigation of the sites, which is not bad because it provides a good framework for the investigation of the UST projects.

First I am going to discuss site regulations and go through the law very briefly and do it in the order we might see at a site. I am going to talk a little bit about sampling and analysis. Some of this is a broad overview and some covers the small points on things we do at site investigations.

There is a guideline for what you would do at a site in 40 codes of Federal Regulations (CFR) 280. This is the entire regulation. Subpart A is the scope and interim provisions—it talks about exceptions, definitions, etc. Subpart B is underground systems, design, construction, and notification. The only part of that we have ever been involved with is the notification aspect. On many of our installations around the United States, they may sometimes have 700 or 800 tanks on individual sites. Every one of those tanks has to have a form filled in for it and sent to the State as specified in 40 CFR 281 for the implementation of State Agency programs.

When I talk about an implementing agency, I may be referring to the Federal Government when there is no State program or it could be the State government. In most cases it is the State government. Just to put a further caveat on what I say, everything is modified by what the State says. My talk deals only with the Federal regulations.

Part C of 40 CFR 280 contains general operating requirements on how to manage an underground storage tank at your gas station or at your BX Army installation.

The rest of the regulation is an area that I will cover in more detail in this talk - release detection, release reporting, investigation, and confirmation is very important to us as well as release response. Corrective out-of-service system and closure is another area of importance to us because this is usually where we first get involved in a project.

Site assessment at closure (Part 72) is covered here, after an underground storage tank has actually been pulled out of the ground. You do not do soil boring or anything like that before you pull a tank out of the ground. At the point of closure, you have to measure for the presence of a leak at the most likely location. This does not mean you have to take 40 samples from all over the site. It is really best to look down there and see where the dirty soil is and take the sample there. But even before that, that may not

be necessary. What we would really like for you to do in your contracting for underground storage tank removals is to write in your contracts options to remove a minimal amount of soil—say 20-30 yd as an initial response to cleanup. It is very likely that you will be able to completely clean up the site with that small amount of soil removal. You may have a State regulator on site and he may be able to bless the hole after the soil has been removed and then you can fill it in and walk away—mission completed. That is really the approach we like to take. We like to get that dirty soil out of the hole and then take a sample. We do not really need to take samples and get analysis for total recoverable petroleum hydrocarbon on the dirty soil. We admit that they are contaminated. Take that soil out and dispose of it however the implementing agency tells you to and then take a sample of the clean soil. Fill the hole in and wait for the results to come back.

A couple of other points - external detection is okay but we do not recommend it for Corps projects. Most of the tanks that we are investigating are not ever going to be used again—so we do not want to try to do tank tightness testing on them. We have found in a number of instances where someone has planned to do an underground storage tank removal project that they go through a tank tightness process to determine whether the tank has leaked. In order to do that you have to fill the tank with product—you cannot do it with water—it has to be filled with product and then do a tightness test. We do not want to suggest that you do that. You should remove anything that is in the tank—there are rules that cover removal. Then excavate the soil from the top of the tank, remove the tank, and then look at the soil underneath the tank. If contamination is discovered underneath the tank, then we have to go back through the requirements of Subpart F of the regulations.

After you have removed the tank from the ground and you have discovered contamination underneath the tank, you have to report it to someone. It does not matter if the tank has been out of service for 30 years—you have to report it to the implementing agency within 24 hr after discovery. We have formats for reports that can be provided to make reports to the agency and the law has an outline of the information that must be provided.

When we remove a tank we have usually taken action to prevent further release. At a site where the tank has been in use or will continue in use, you have to first remove the product from the tank so there will be no further release. That has to be done within 24 hr. That is the initial response.

Most of the rest of the process comes at longer time intervals - especially if we have to write contracts.

Initial abatement and site checks - this is what occurs beginning with the second 24 hr after removal of tank and discovery of leaking system. Continue monitoring and mitigate fire and safety hazards as in the case of gasoline or something that migrates through soil rapidly and may be entering basements and contaminating sump pumps in buildings nearby. Remedy the hazards of excavated contaminated soil. Regulations are silent on what that actually is, but basically what that means is - let it air out, let it lay

in the hot sun and let the gasoline vapors evaporate. In many cases you may be able to remove the material directly to a solid waste landfill, usually what the States will call a class II type or one that is monitored on a regular basis.

You have to quantify and characterize the release. What was the material in the tank and how much of it was possibly leaking? That will be very difficult to do for something that leaked 30 years ago, but again that is information that will be included in the initial report to the State. Determine the presence of free product and initiate removal. The initial abatement and site checks must be reported to the implementing agency within a 20-day period. These are all things that you must do if you are involved in a tank removal project. These are requirements.

The initial site characterization is something that must be put into a report to the implementing agency within 45 days of the discovery of the release. Assemble information concerning the site and the nature of the release. Again that is most of the stuff that you have already put together for the initial abatement and site check report. They want that all included again. They want data on the surrounding population, water quality, water well use, sewers, climate, land use, etc. You have to gather information on all these things—the same sort of information you might have to gather for planning purposes for a civil works project. The people in the planning divisions at the Corps offices may have a lot of this information readily available for local areas. You have to provide the results of your free product investigation and provide it in your report to the implementing agency within 45 days. Free product removal must be initiated immediately upon discovery. Free product is gasoline or fuel floating in the hole. Now it may be floating on the surface of the water table and it may have migrated far away from the site. There are ways of putting wells in the ground to initiate recovery of free product from the soil in a relatively easy manner. Those things have to be done very quickly.

Again, flammables must be handled in a safe and competent manner. Fire departments and local fire marshals are asked to assist in this aspect. The time clock is running for this event along with the site characterization schedule and again the free product removal must be completed and reported within 45 days. This will not happen on most of the older sites that we have; but when we begin site investigations at active installations, we frequently find free product. This is especially prevalent at the Air Force sites.

For the investigation of soil and groundwater cleanup, we look at the extent of contamination. This may involve soil gas surveys, the installation of monitoring wells, deep soil samples, etc., to determine if the contamination has moved far away from the site. Petroleum products do not spread laterally until they reach the water table. They pretty much go straight down in the soil. You should make a determination of the direction of the flow of underground water in the area and look in that direction. In the installation of monitoring wells, you will determine if there is free product floating on the groundwater table and determine if free product recovery is needed. There may be contaminated soil in contact with the groundwater causing contamination of the groundwater. If you have low molecular weight petroleum hydrocarbons such as ben-

zene, toluene, xylene, and ethyl benzene, these contaminants are regulated individually in most of the State water quality standards because of their carcinogenic and other toxicity characteristics. It is very important to determine if these are being leached toward potable water supplies. You must also perform any other activities the implementing agency asks you to do. The regulation states that this report must be provided as soon as practical or sooner if required by the implementing agency.

A corrective action plan is a further activity that may be required on demand by the implementing agency after you have provided your initial site characterization and other reportables after the 45-day period. They may feel that further remediation is necessary. They may ask for complete characterization of the substances that were released, a complete study of hydrogeologic conditions in the area, the proximity of other water resources, potential effects of residual contamination and exposure assessment, etc.

The correction action plan is probably a break-off point where we would have the Districts outside the Missouri River Division having activity.

Upon approval of the initial site characterization, the implementing agency will ask the Corps to implement a plan of correction. They will be asked to monitor, evaluate, and meet a schedule that they impose if nothing in the regulations defines this time schedule.

There is another alternative that we may employ in a project like that and that is to initiate a corrective action without being asked to by the implementing agency. If we are going to do that, it is our obligation to notify the implementing agency of the kind of corrective action that we are going to begin in lieu of completing all of the studies. We have to comply with any conditions the implementing agency places on us and incorporate all of the provisions of the initial long-term corrective action plan.

Last, but not least, we always have to have public participation. If there is going to be a corrective action plan, the implementing agency has to issue a public notice. They insure the availability of all the information that we have gathered. They must hold a public meeting and provide an indication to the public of any problems that have developed in the project as a result of the release of any product that may impact on public water supplies.

These are the regulations that we would normally be involved with in the course of an underground storage tank project.

QUESTION: What do you do with the tank when you remove it?

MR. ADAMS: It varies from state to state. We do not cut it up. We do not puncture it with holes. There is a standard that tells you how to prepare a tank for disposal and that is basically where we would leave it—with the contractor to take the tanks away. They usually leave it out in the sun for a period of time and then cut it up. They are labeled as having contained petroleum products and not usable for potable water. They are really not usable for anything. They will cut them up.

When sampling tank contents, there are probably no particular requirements for disposal of the aqueous phase. The contractor can probably pump it out of the tank and haul it away and discharge it into the sanitary sewer system. I said "probably." The implementing agency will probably allow this. There is no real reason why they should not. Because the biological treatment systems in city sewage treatment plants readily break down the contaminants that are contained in the water in the tank. I am referring only to the aqueous phase in the tank. If there is an oil or gas layer, this cannot be disposed of in this manner.

We have relatively simple methods for sampling underground storage tanks. Because of the parameters we will be measuring there is no restriction against using something like a peristaltic pump which makes a very simple sampling tool. What we do is take a stick and coat it with a material called Kolorkut that can be purchased at most petroleum product supply houses. It is gold in color. Insert the whole stick down in the tank until it touches bottom and then withdraw it. There will be two markings on it if there is water in the tank. The red area on the stick indicates that it encountered water and then the organic phase is indicated by the sheen on the stick. It is a very simple matter then to fasten a tygon tubing at either level to take a sample of the aqueous phase or the organic phase.

The Environmental Protection Agency (EPA) intended to enable the recycling of a lot of material when acts such as the Resource Conservation and Recovery Act (RCRA) were passed. The petroleum products found in most underground storage tanks can still be burned. We can dispose of them under regulation 40 CFR 266.4, the rules for burning of waste fuel and used oil in fuel boilers and industrial furnaces. The products that are removed from these tanks should be recycled. In fact the only people that you can get to come and pump it out are those who do recycle. In that rule, there are requirements for the analysis of the contents. They have to analyze for four metals—cadmium, arsenic, lead and chromium; total organic halides and flash point. Nothing else, no BNAs, no volatiles, no hazardous substances list metals.

We do not have to do $10,000 worth of analysis on the contents of these tanks. This can be done for less than $200.

In order to be disposed of in this manner, the contents of the tank have to meet these criteria:

Arsenic $\leq$ 5 ppm

Cadmium $\leq$ 2 ppm

Chromium $\leq$ 10 ppm

Lead $\leq$ 100 ppm

Total organic halides $\leq$ 1,000 ppm

Flash point 100° F minimum

EPA's intention in writing this rule was to make things recyclable. The 1,000-ppm level for total organic halides allows for contamination by solvents normally used in gas stations. Most of the solvents used in gas stations are chlorinated.

You cannot, however, mix listed hazardous waste compounds with the fuel for the purpose of disposal.

A lot of gas stations have burners on site where they burn waste oil for heat. If the total organic halide concentration is >1,000 but <4,000 ppm, you have to demonstrate that you have not mixed hazardous compounds for the purpose of disposal. The material would then have to be analyzed using another method such as 8010 to identify the specific compounds. If the total organic halide concentration is greater than 4,000 or the specific analysis identified hazardous waste compounds, then the material would have to be sent to an RCRA incinerator that has scrubbers.

For total organic halides, there are eight different methods to choose from. They are all draft at this time. They include (1) bomb combustion method for solid waste, (2) x-ray fluorescence, (3) oxidative combustion and microcoulometry, (4) titration with silver nitrate, (5) anion chromatography, (6) field test kits, (7) titration with mercuric nitrate, and (8) micro-coulometry using an extract of chlorinated compounds.

The last item that I would like to cover is the sample numbering system. Some people use sample identification that includes location, the number of the sample, the site, the kind of sample, the date, the depth, and the kind of analysis to be done—all using about 40 characters or more. This promotes transcription errors. I would like to promote the use of a short clear sample number that contains all of the information necessary to differentiate one sample from another; a four-digit code that has the project name, four digits for sampling site, and four digits for a sequence number. For the site name, just use any four letters from the site that you wish—you can go a long way without ever duplicating. For the four digits in the middle, you can designate what kind of a sample you have and which location on the site you took it from. For example, SS03 would indicate surface soil from site 3. For the last four digits just begin with 0001 up to 9999. In your notebook you can then put all of the other information about the sample that is needed. Keep the sample numbers simple. There is a lot less chance for error. Keep instructions and other sample information in the field notebook.

I have prepared a guide for underground storage tank projects and it should be available in report form very shortly. Some of you already have the draft version. It includes the most recent provisions and changes in the law.

I would like to point out that I have only been discussing tanks that contain petroleum products—not tanks that contain other regulated substances. Unless you have reason to believe that the tanks contain other materials, it is usually a safe assumption to conclude that they are petroleum product tanks. We have seen no instances at this time where tanks contained other than what we believed. It could happen, but EPA states that the probability is very slim. If the record search is done adequately, you will have very few surprises.

Converging Chemical Quality Management Procedures During Multi-agency Federal Facility Agreements

Mr. Lance Hines
Omaha District

My talk today deals with the various types of quality assurance (QA) procedures and quality management procedures that we are involved with at our projects. The Air Force has their installation restoration guide, we have the Engineer Regualtion (ER), the Navy has their QA guide, and when you get to the Regions and the States, they have their QA objectives. These documents all follow a kind of parallel course and they all are aimed at getting quality data. What happens though, is that we go to Air bases or to Army facilities and we scope the work to investigate these areas and we're not under any type of restraints. But we're also trying to get good quality data and we direct the contractor to use the Corps' ER 1110-1-263, but we also direct them to follow Comprehensive Environmental Response, Compensation, and Liability Act guidance and other types of guidance. We do this for 2 or 3 years and all of a sudden the Air Base or Army Facility is put on the NPL list. Before you didn't have any interaction between these other agencies. Now, for example, at a site in California we have 10 agencies. When we have a meeting, at least 20 people are there where you used to have maybe 3 - you, the contractor, and maybe the base environmental coordinator. So, I thought maybe you'd be interested in some of these Federal facility agreement meetings where all of these guidance documents come together in one place. In addition to all of the data quality documents I have mentioned, there are also the RCRA facility investigation documents.

At the initial meetings that I have had with all of these agencies, everyone has been amicable. I don't know how long this will last. Initially, we had only been following Corps rules. Now all of a sudden, we are being scrutinized by the Environmental Protection Agency (EPA) and their contractor people. So they are taking all of our old work and they are running it through their contractors and making some assessments of some of our old data. Some of the questions that I have concern when these things converge in Federal facility agreements. What will be the outcome? Are they going to throw out all the work that we've done in the Corps because we don't have piles of chromatograms lying around? Exactly what is going to take place? I am concerned about how the Solid Waste Management Units (SWMUS) from the Resource Conservation and Recovery Act are going to fit into all of this. How are little sites that you suspect have a problem, but have no background on, going to fit into the picture? What is going to be called an operable unit? Right now these things are all being discussed and it appears that for the Air Force bases and the Army bases that this may be a godsend, because now we will have one set of rules and have one set of guidance documents that we are going to create. Hopefully this guidance document will be a culmination of all these other guidance documents.

I guess that one of the biggest questions for us will be the inclusion of specific requirements that we have in the Corps - like quality control summary reports, our

laboratory validation program, our QA sample program. These questions are coming up at these Federal Facility Agreement meetings, because EPA only has a quarterly performance evaluation sample that they send to their contractor labs. These things are coming together now and I don't know what the outcome will be. What I have so far on the first project is an outline for the QA project plan. This is the general plan for the large multi-site facility and is not for the specific individual small parts of the project. I have not yet had a chance to go through it and see how it agrees with our ER. Some of the agencies involved, Region IX EPA, in particular, like our QA type program because of the site-specific nature involved. I don't know yet what we are going to end up doing. I don't know if we will have our QA program intact or if it will be a hybrid situation with EPA procedures.

I personally think that we should keep our QA program. Our Missouri River Division lab has been a tremendous support to me at some of the sites I've worked on. Every time I hear that the Division laboratories might go out of business, I cringe because we need their support.

I have some points that I would like to make concerning our QA program:

1. It opens a line of communication between the field people taking the samples and the QA laboratory. This forces the field team to start thinking QA from the beginning. Most of these people are geologists or engineers, very few are chemists. This is also beneficial to the contractor because he now feels that there is someone out there waiting for what he is doing. The contractor has a place that he can go to ask questions.

2. I think it elevates the awareness of the samplers, and also the drillers. If they know that they have to take a QA split sample, they know that they have to do it properly and get the right amount of sample. Otherwise he will get a call from the QA lab telling him what he did wrong. I know it creates an impression because I've been out there in the field when they are collecting, and they know that they have to have all their bottles ready and they are thinking quality assurance from the very beginning. I think it highlights the data quality objectives because generally in the scopes of work that I write, I put in there that they have to target their quality assurance splits to contaminated samples. So they have to think about the project and not just go out and collect samples. A split from a background area will not give us as much information as one taken from a contaminated area.

3. As soon as the QA samples are received in the QA lab, they can see how the samples are preserved, packaged, and shipped, how they were iced, and how they were labeled. You have to assume that the way we receive samples in our laboratory is similar to the way samples are going to the contractor laboratories. Generally as soon as the first samples are received in the QA lab and problems are noted, someone from the QA lab will call the project manager and tell him what is wrong. Usually problems can be detected soon enough that the drill rig is still in the area and if necessary, they can redrill before they leave the site. Most contractors are willing to do that because the cost is not that great; but after all the work is done and the data are bad because the samples were bad, the cost to remobilize to collect additional samples is tremendous.

4. A couple of years ago at a seminar, I heard a contractor get up and say that this QA business is a lot of garbage, that QA sample data don't agree at all. She had a chance to tell a lot of people that QA samples don't match. But from my experience and what Joe has already shown you, I think we can say that data do match. Without exception, at the projects I've dealt with, there is enough data that matches that we can frequently salvage projects based on the QA data. In some cases there was not enough information from the contractor lab to verify their data, but the QA lab data backed it up and had sufficient controls in place to validate the data. This is another reason to collect QA samples, not just to check on the contractor. I have been well pleased with QA data comparisons. Generally when the data does not match, you start looking into it further and you discover problems all the way through the project. Some are salvageable and some are not.

5. Another good reason for a QA program is oversight of the contractor's lab. This oversight is very site-specific. Under EPA's program, they generally check out their laboratories, but then their QA stops. In the Corps program, we have people go out to the site to be sure that things are running smoothly. It's a more cost-effective type monitoring because now if you have problems, you can limit them to small areas of a big site or maybe to one site out of 25 or 30 on an air base. So it's not like a disease that contaminates a data package and spreads over the whole project. And this has happened. Recently the State of Arizona didn't like any part of a $3.5 million project, not one that we had done. There was no QA done on the project. The State went through the project chromatogram by chromatogram and threw it all out. With a little QA, the problems might have been caught at the beginning and the project could have been salvaged.

6. Having a QA lab allows us to use our budget for projects more effectively. For example, if the contractor can do all of the analysis except explosives and he has to contract that analysis out for about three times the normal price, then I will cut that part of the work out of the project and send it to our QA lab for analysis.

7. We also have the option to use some of our QA analysis as part of the quality control effort where money is tight.

8. Our QA program also gives us a chance to become more familiar with the contract lab. If a contract lab doesn't want to cooperate in the validation process, it's a good indication that perhaps he is trying to hide something. It seems like for the really good labs, our validation procedures are easy. Although they haven't always worked, they worked more often than not. I think that the problems that EPA has with their labs are not going to be readily visible and corrected. With our program we work with the labs to correct their deficiencies. That is why I am going to fight to keep our QA program in some of these Federal Facilities Agreements.

Data Quality Objectives

Dr. Marcia Davies
Missouri River Division, Chemical Review

I am going to share some information that I have gathered on data quality objectives (DQO). It seems as though when our hazardous and toxic waste (HTW) program first started to build, we didn't have time to think about how differently we could work in some aspects of what we were doing and now we have more people and more types of projects and bigger and different problems. So we had to think about whether we are always working smart. I think one of the most helpful pieces of guidance that the Environmental Protection Agency (EPA) has published in recent years is the Office of Solid Waste and Emergency Response (OSWER) Directive 9355.0-7B, March 1987. The name of this is Data Quality Objectives for Remedial Response Activities. It's a two-volume EPA guidance document. The first volume is a development process and the second volume is an examples scenario. This is still free, I think, from the Office of Research and Development in Cincinnati.

The EPA guidance for quality assurance project plans states that for every project, a set of DQ objectives should be determined. This should be determined early on for the scope of services or work plan for in-house work. The determining or writing of these is primarily the responsibility of the District chemist. As new design FOA are coming on board for HTW work, I tell them that they need a District chemist. They ask why, since they have the Division labs. The scope, work plan, planning of the analytical, determination of methods, etc., with the help of the Division lab in our office is really the job of the District chemist.

The determination of the data quality objectives is really a three-step process (Figure 1). The first thing that one needs to do is to identify the decision types and the first step in that is to identify and involve the data users. These are the regulators and the customers (such as the Air Force). You need to know what type of project it is and what do the decision makers want to know. What are the disciplines that are going to be involved? Geology? Engineering? Hydrogeology? Chemistry? Biology? Geochemistry? Where are you going to find those disciplines within the organization?

Then you need to evaluate available data. This could be a lot of sources such as the US Geological Survey, EPA, other Corps Districts, States, local regulators, installation environmental offices, and Potential Responsible Party (PRP) files. There are a lot of sources of information. After that you develop a conceptual model, which is essentially a source-pathway-receptor model, so that you can figure out where you need data.

Then specify what you need to know. Are you looking for the horizontal or vertical extent of contamination? Are you looking for groups of exposure? Are you trying to determine if a treatment plan will work?

Then you proceed to Stage 2 where you look at data uses and needs. Figure 2 shows how the elements in this process interact. The data use categories normally include site characterization, health and safety, risk assessment, evaluation of alternatives, engineering

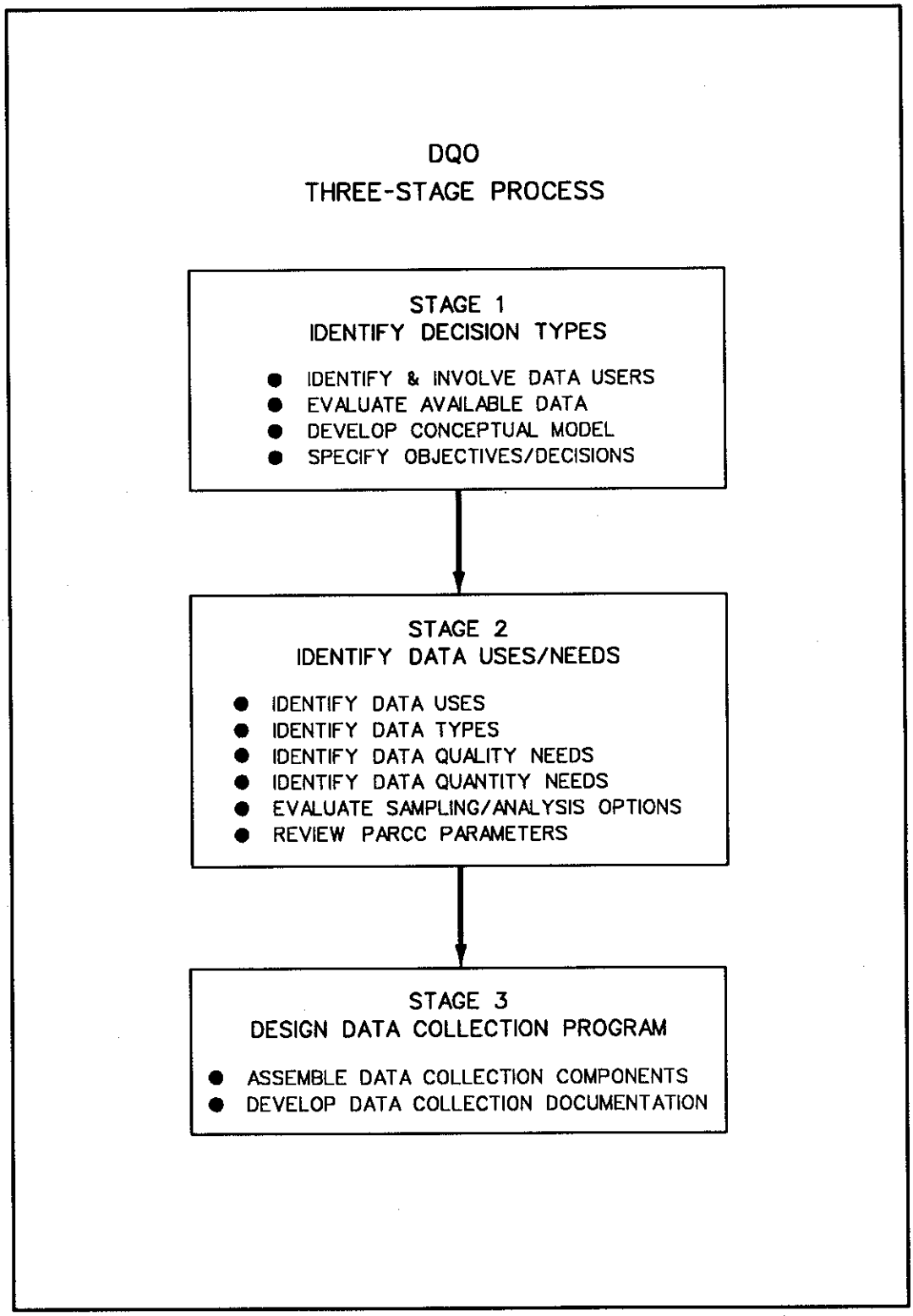

Figure 1. Determination of DQ objectives

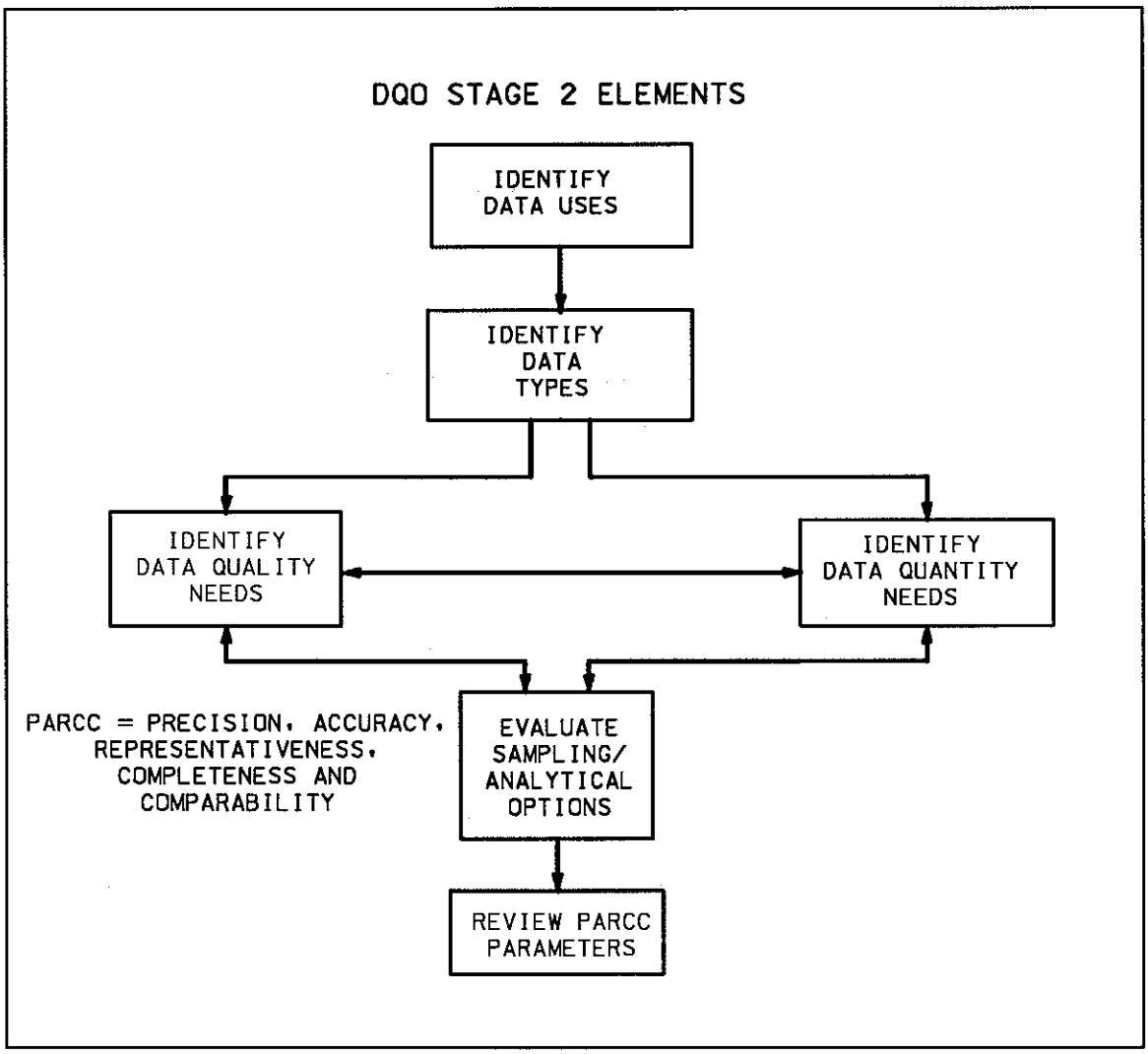

Figure 2. Stage 2 elements in meeting DQ objectives

design of alternatives, monitoring during remedial action, and PRP determination. Exactly what the use or multiple uses of the data are going to be is very important in terms of what kind of methods you are going to use and what kinds of detection limits you are going to need. This guidance has a number of handy little forms to use in helping to set up your DQ objectives. Across the top of this form (Figure 3) are listed data uses and down the side are your sources of data. You can then fill in this table or a table like this to outline your data uses.

Data types that are considered in this guidance include chemical as well as geophysical data. Chemical data will include both field and laboratory data. The laboratory data may come from both on-site labs and off-site labs. I think the geologists and the geotechnical engineers are beginning to recognize the importance of quality assurance (QA) in their data and are beginning to write some guidance documents with QA.

The next thing that you want to look at are your data quality needs. You need to prioritize the data uses. What is the most important aspect of the project in terms of data usage? What are appropriate analytical methods or levels to serve those uses? What are the main contaminants of concern? Sometimes all of the contaminants at a site are not going to be important when determining contaminants of concern. You might want to concentrate on one or two contaminants that are problematic and base your decisions on those indicator chemicals. What is the level of concern? What are the applicable, or relevant and appropriate requirements? What kind of problems do you have? Again that goes back to your source-pathway-receptor model. You have to determine what kind of action levels are going to be important, what kinds of laws and regs are going to be involved. After that is determined, you decide what kind of detection limits are needed for those indicator chemicals and then you are starting to scope methods. Also it is important to determine here whether or not there are going to be critical samples. Are there some samples on site that are actually going to drive decisions? Are there critical groundwater wells? Are there soil samples in a certain area that are going to drive the need for multi-million-dollar cleanups? Then when you are scoping the work, target those critical samples. Make sure that they are the ones that get the extra quality control. Then we need to make a determination of data quantity needs. How many samples are you going to take for each matrix at each location? How much money do you want to spend or how much do you have to spend? How can you spend it most efficiently and wisely?

Before we get to appropriate analytical levels, I want to talk a little about CLP, EPA's Contract Laboratory Program. I think that everyone knows that specific analytical methods are part of the contract and are written into the contract in great detail. They include very specific quality control and very detailed data package requirements. If you are going to say that you are going to use the CLP, you are using something called the Sample Management Office, which is operated by a contractor called Viar and Co. Sometimes we say we are going to use the CLP when we are only referring to the analytical protocols.

MR. GOUDA: How long does it take for EPA to give you back your data?

SITE
NAME _____
LOCATION _____
NUMBER _____
PHASE _____

DATA USES

DATE _____
CONTRACTOR _____
SITE MANAGER _____

RI1 RI2 RI3 ERA FS RD EPA REGION RA

DATA USE / MEDIA	SITE CHARACTERIZATION INCLUDING HEALTH & SAFETY	RISK ASSESSMENT	EVALUATION OF ALTERNATIVES	ENGINEERING DESIGN OF ALTERNATIVES	MONITORING DURING REMEDIAL ACTION	FRP DETERMINATION	OTHER _____
SOURCE SAMPLING TYPE _____							
SOIL SAMPLING							
GROUND WATER SAMPLING							
SURFACE WATER/ SEDMENT SAMPLING							
AIR SAMPLING							
BIOLOGICAL SAMPLING							
OTHER _____							

NOTE: CHECK APPROPRIATE BOXES

CDM SF DQO 1991

Figure 3. Sample form used in setting up DQ objectives

DR. DAVIES: Well, if I ask Emile, he's probably going to tell me that it's going to be a couple of months before I get my data back because he is a CLP contract officer. So, I'll direct your question to Emile and ask how long before we get back validated data?

DR. BOULOS: The whole process will probably take 2 months.

DR. DAVIES: Well, I'll tell you what our experience was on a Superfund site. We got our data back almost 3-1/2 years after we sent our samples to the sample management office. That is the only time that we ever used the full-blown CLP process.

If you need something that resembles the CLP, you can specify the protocols. You can get some samples for the QA lab, you can get the data package, you can learn to do contract compliance screening and you can hire someone to do data validation within a month or so. All of the EPA Regions have companies under contract to them to do data validation and you can find out from them who they are if you need this service. I might also mention that some of the Districts have chemists in-house who are trained to do full CLP validation. I'm not sure that's good use of their time.

QUESTION: Do you have to use a CLP lab in order to do this validation?

DR. DAVIES: No, you only have to use a lab that presents its data in this format. There are numerous labs that have been CLP labs who still run the protocol. If the project is going to require it, when we send out the audit samples, we request that they run using the CLP protocol. Usually when we inspect the laboratories, if the lab has ever been a CLP lab, they are still running the quarterly check samples from EPA and they will make the results of those samples available to us.

MR. HINES: I think the important thing is to make sure you get the information that you need for data validation of the type that you want.

DR. DAVIES: That's right, if you are going to use CLP validation, then you have to get the CLP data package.

QUESTION: What is in the package?

DR. DAVIES: I believe Ms. Myers was showing us earlier some of the information that had to be included.

MS. STRONG: When we put together one data package for one set of metals, volatiles, BNAs, pesticides, and polychlorinated biphenyls (PCBs), we had over 1,200 pages. These were single samples. This included all the tuning data, calibration data, detection limit data, preparation notebook data, etc.

QUESTION: When would you want to do that?

DR. DAVIES: When the regulator requires it. The only time that we have been required to do this was when we were conducting an RI/FS at a Superfund site for one of the EPA regions.

QUESTION: Was this because of the legal ramifications?

DR. DAVIES: Yes, because it was an enforcement action. However you can do enforcement legal battles with other methods so long as you have the data carefully documented and have the correct forms filled out.

Now let's talk about what EPA considers appropriate analytical levels. The first level is field screening using portable instruments. That could be using the HNU-OVA type instruments for obtaining basic qualitative type information. Level two is field analysis using more sophisticated instruments possibly with a mobile on-site lab. This could be something like a soil vapor survey. It depends on what type of detector you are using. Level two is analyte specific. You could possibly be using a field gas chromatograph to determine toluene or benzene levels. Field analytical methods like Tom was talking about would be level two because they are analyte-specific and they are quantitative. Level three would be off-site analysis using EPA-approved or standard methods. CLP methods without validation or all the documentation would be level three as would SW-846 methods. This means without all the raw data. Level four is the CLP routine analytical services. This means using CLP procedures with all of the documentation and validation. Level five is used where sites require non-standard methods or method development. CLP special analytical services would also be included in level five. As you proceed from Level One to Level Five, you become more sophisticated and more expensive. Data quality is increasing, so you are looking at longer turnaround time and higher cost as you go up to the higher levels.

If you are looking at level one, you are looking at an immediate response, level two is pretty fast, level three is information you can get within 2 weeks if you have to, although average time is about 4 weeks. Level four depends on a lot of things, and level five could take years. The form shown here (Figure 4) shows the appropriate analytical levels by data use. The checks show which of the levels may be appropriate for the various activities. You can see that level three is universally appropriate. It can be used for all phases of an HTW investigation with the appropriate documentation, quality control, safeguards written in, and data to the user. Levels one and two could probably be used a lot more than we do in site characterization, evaluation of alternatives which might be treatment plant evaluations or pilot plant evaluations, and in monitoring during construction. So level three is what we have standardized on in the QA program and we only venture down into levels four and five when we have to. We probably could be a little more economical and a little less conservative and make more use of levels one and two.

This next form (Figure 5) is a handy tool to use when setting up your data quality objectives. It summarizes most of the activities that you need to consider at a site. Down in item 10, you can add something on QA samples to take care of the Corps requirements. Since this comes from an EPA document, they don't mention QA sampling.

Finally, you write your scope and your work plan. You design your data collection program with all of those sampling points and analytical methods and then you develop your documentation, which would be your QA Project Plan, and you are ready to go.

APPROPRIATE ANALYTICAL LEVELS-BY DATA USE

DATA USE / ANALYTICAL LEVEL	SITE CHARACTERIZATION (INCLUDING HEALTH & SAFETY)	RISK ASSESSMENT	EVALUATION OF ALTERNATIVES	ENGINEERING DESIGN OF REMEDIAL ACTION	MONITORING DURING IMPLEMENTATION OF REMEDIAL ACTION	FWP DETERMINATION	OTHER
LEVEL I	✓				✓		
LEVEL II	✓		✓		✓		
LEVEL III	✓	✓	✓	✓	✓	✓	
LEVEL IV		✓	✓	✓		✓	
LEVEL V		✓		✓		✓	
OTHER				✓			

NOTE: CHECK APPROPRIATE BOX (✓)

CDM SF DQO 1.001

Figure 4. Appropriate analytical levels by data use

DQO SUMMARY FORM

1. SITE

NAME _____
LOCATION _____
NUMBER _____

EPA REGION _____

PHASE _____
RI1 RI2 RI3 ERA FS RD RA
(CIRCLE ONE)

2. MEDIA *(CIRCLE ONE)*	SOIL	GW	SW/SED	AIR	BIO	OTHER _____

3. USE *(CIRCLE ALL THAT APPLY)*	SITE CHARAC. (H&S)	RISK ASSESS.	EVAL ALTS.	ENGG DESIGN	PRP DETER.	MONITORING REMEDIAL ACTION	OTHER _____

4. OBJECTIVE _____

5. SITE INFORMATION
AREA _____ DEPTH TO GROUND WATER _____
GROUND WATER USE _____
SOIL TYPES _____
SENSITIVE RECEPTORS _____

6. DATA TYPES *(CIRCLE APPROPRIATE DATA TYPES)*

A. ANALYTICAL DATA			B. PHYSICAL DATA	
PH	PESTICIDES	TOX	PERMEABILITY	HYDRAULIC HEAD
CONDUCTIVITY	PCB	TOC	POROSITY	PENETRATION TEST
VOA	METALS	BTX	GRAIN SIZE	HARDNESS
ABN	CYANIDE	COD	BULK DENSITY	_____
TCLP	_____	___	_____	_____

7. SAMPLING METHOD *(CIRCLE METHOD(S) TO BE USED)*

ENVIRONMENTAL	BIASED	GRAB	NON-INTRUSIVE	PHASED
SOURCE	GRID	COMPOSITE	INTRUSIVE	_____

8. ANALYTICAL LEVELS *(INDICATE LEVEL(S) AND EQUIPMENT & METHODS)*
LEVEL 1 FIELD SCREENING-EQUIPMENT _____
LEVEL 2 FIELD ANALYSIS-EQUIPMENT _____
LEVEL 3 NON-CLP LABORATORY-METHODS _____
LEVEL 4 CLP/RAS-METHODS _____
LEVEL 5 NONSTANDARD _____

9. SAMPLING PROCEDURES
BACKGROUND - 2 PER EVENT OR _____
CRITICAL(LIST) _____
PROCEDURES _____

10. QUALITY CONTROL SAMPLES *(CONFIRM OR SET STANDARD)*

A. FIELD	B. LABORATORY
COLLOCATED - 5% OR _____	REAGENT BLANK - 1 PER ANALYSIS BATCH OR _____
REPLICATE - 5% OR _____	REPLICATE - 1 PER ANALYSIS BATCH OR _____
FIELD BLANK - 5% OR _____	MATRIX SPACE - 1 PER ANALYSIS BATCH OR _____
TRIP BLANK - 1 PER DAY OR _____	OTHER _____

11. BUDGET REQUIREMENTS
BUDGET _____ SCHEDULE _____
STAFF _____

CONTRACTOR _____ PRIME CONTRACTOR _____
SITE MANAGER _____ DATE _____

FOR DETAILS SEE SAMPLING & ANALYSIS PLAN

CDM SF DQO 1.002

Figure 5. Summary form for DQ objectives

The data quality objectives should be revisited when the contractor's lab is validated, when the QA samples are targeted, when the data comes back and you look at it, and when you do the data validation. Another point we probably need to consider is who is going to keep the data, and who is going to store it and be responsible for it.

FUDS Update

Dr. Bruce Heitke
Acting Chief, FUDS Branch, CE
Washington, DC

We have various activities that are classified as hazardous and toxic waste (HTW) and fall under the Environmental Restoration Division which is a part of the Directorate of Military Programs at Headquarters, US Army Corps of Engineers. We have the Superfund Program for which we do work for the Environmental Protection Agency at selected sites. We have the Installation Restoration Program (IRP) for active Army programs, the Formerly Used Defense Sites (FUDS) program for formerly used defense sites, and then we have a catch-all category, which is the Air Force work and work for others. This table shows a little of the history of the program as to how the funding has gone since FY-87 and how it is projected to go.

Table 1
Environmental Restoration Program

Program	FY-87	FY-88	FY-89	FY-90	FY-91	FY-92
Superfund	$40M	$72M	$130M	$200M	$200M	$200M
DERP						
FUDS	$37M	$28M	$41M	$67M	$99M	$101M
IRP	$140M	$153M	$204M	$117M	$208M	$212M
Work for Others	$20M	$18M	$27M	$32M	$32M	$32M
TOTALS	$237M	$271M	$402M	$476M	$539M	$545M

The IRP includes the programs executed by both the US Army Toxic and Hazardous Materials Agency (USATHAMA) and the rest of the Corps. For the FUDS program we have undergone some rather rapid growth, last year jumping up to $41 million and this year up to $67 million, and next year we are expecting $99 million. In the FUDS 5-year work plan, we project a capability in FY92 of $250 million and in the out years, we really don't have enough information to do a good job of projection. There is a potential for the numbers for FUDS and IRP to increase beyond what I have shown here because there is a lot of interest in Congress to facilitate these cleanups. I think that we can say based on the projections and everything that has happened, the toxic and hazardous waste programs are here to stay. I suspect that a lot of people up to this point have thought that this was a flash in the pan that would disappear, but with the interest of the Chief in environmental programs and hazardous waste, I think the word has gotten down that these programs are here to stay. Mr. Flanagan's words to us yesterday are an acknowledgment of the importance of this kind of work to the Corps.

How is this work executed? We have three main players in the Corps - we have our design Division, which is Missouri River Division (MRD), we have Huntsville, and we have USATHAMA. In 1987 there was a management plan that came out that called for decentralization of this work, a process that up to this point has been fairly slow. In the future this decentralization will increase and I suspect more rapidly than you think. At this time each Division is selecting a design District to which work will be brokered. This will occur in the geographical area of the Division. Recently since the beginning of the year, there have been three FUDS projects that have been brokered. There was one to the Department of Defense (SWD), one to Ohio River Division (ORD) and one to the North Central Divsion (NCD). MRD has put a brokering plan together and in that plan they have placed the FUDS projects in the highest priority for brokering. This is probably because we don't have a customer here other than the Department of Defense (DOD) for these projects. They are usually smaller than the others and are the most amenable to brokering.

What is the impact of this decentralization on the Division laboratories? This brokering concept is not new in the area of chemical data quality management. MRD has made an effort to broker quality assurance on projects to Division laboratories, even when projects themselves have been conducted by MRD. So in many cases Division labs may have found out about projects from MRD even before their project managers. That, of course, is something that will change and will require a lot better communication between the chemists and Divisions and Districts and their project managers. For the last 2 years we've had an FUDS workplan to identify the work to be done and the executing FOA. I think it would be a good idea for everyone to get a copy of this workplan and see what they have scheduled. The FY91 workplan was just distributed last week and is in very crude form at this time, but it's never too early to see what is coming up. You can make use of that to match up your personnel requirements with what is coming down the pike. You need to start talking with your project managers and see what their schedule is going to be.

About the FUDS program, some of you are familiar with it and some aren't. This is a program for addressing the hazardous waste problems that were left behind on Defense sites that were formerly used. Once the property is excessed to GSA, then that site is eligible for the FUDS program. At the initiation of the program, there were about 7,000 sites listed based on information from all of the services, from our real estate offices, from anybody who had any ideas about them. At these 7,000 sites, we are working our way through them trying to determine if there is a problem. The first step in this process is to determine eligibility of the site. This is achieved by determining if the site was actually used by a DOD component. Then we look at project eligibility. Is there a problem at that site? Is there a hazard there and if there is, is it the result of DOD operations at that site? Out of the 7,000 sites, we have made that determination on only about one-fourth of the sites, somewhere between 1,700 and 1,800 sites. Of those 1,700 sites, about 17 percent have been determined to have eligible projects or to be problems that DOD is responsible for. As you can see, we have a long way to go in the program. In addition to that, many of those sites have been determined to be

containerized HTW sites which consist primarily of underground storage tanks or transformers or things of that nature that are relatively simple to remediate. There are some containerized sites at former Army or Air bases that are not. Some of them are vast with hundreds of underground storage tanks and when there is a release, it becomes very complicated. But for the most part, our hazardous and toxic waste sites that require an RI/FS for further investigations of some sort have not gone beyond the RI/FS stage. Funding up until now does not reflect the requirements of most complex sites. So, in spite of the fact that we have been through a quarter of the sites and determined eligibility, that is in no way a reflection of where we are in this program. We have a long way to go, we have a few of our big hazardous waste sites that are in the design. We have about 35 RI/FS projects under way. So the big funding requirement is yet to come. Up to this point we have not had a big need to prioritize, but that is going to be changing very shortly.

Recently we made some changes in the program for the purpose of accelerating the initial step of the process to determine eligibility. Our goal is to complete all of these determinations by the end of FY96. The first step in the process is the preliminary assessment to determine site and project eligibility which usually consists initially of a records search. Then prior to making the final decision, a site inspection is made. You really can't make an eligibility decision based on the limited sampling and analysis that you do during a site inspection. So this process has delayed the determination of site and project eligibility. So we're moving the site inspection part of the process out of the inventory phase and we're de-emphasizing the importance of the site inspections. We are now using them to determine if additional activities are required at that site. If you can make that determination without doing a site investigation (SI) then there is really no need to do an SI. But if you go out to a site and you don't identify a problem, then obviously there is no need for an SI. But if you go out to a site and you see sufficient evidence of a problem, you know you are going to have to do a lot of further investigation, there's also no need to do an SI because basically all you would be doing in the first step of your RI/FS would be repeating the work that was done in the SI. We suspect that there will be some resistance to this change because this work was carried out by the geographical Division or the selected District within that geographical Division. Folks will be looking at that as taking the bread off their plate, but I feel very confident that people will see that the brokering will occur anyway. Sufficient work will be passed along to keep the Divisions happy.

John spoke to us about work with containerized HTW which consists primarily of underground storage tanks. This task has been given to every District, not just to selected design Districts. There is another impact, however; as John pointed out, there are some very tight time lines with some of these activities. Designs will have to be written with a lot of options and contingencies that can be activated quickly so that all of these time lines can be met. You would expect that if there are long-term corrective actions, that there would be a tendency for MRD to broker the FUDS work.

Mr. Flanagan talked yesterday about Focus-90 and the Chief coming around and getting everybody energized about environmental and hazardous waste programs. There is

a lack of knowledge about what this really means to the Corps. How do we really do this job that everybody is getting so excited about? Does the Division Commander understand what it means? Does the Engineering Division Chief understand what it means? Do your laboratory directors understand what it means? Do any of us really understand what it means? Fully? It's up to each one of us as we understand the problems to educate those above us about the implications and the requirements that we need to do this job. Nowhere is that more important than with the chemists in the Corps of Engineers. I've stood up here for a good number of meetings now and listened to complaints about grade levels and numbers of personnel and it just points out what a vast education we have to embark on to get everyone to understand what we are doing. Until we do that, chemists in the laboratories will always be viewed as black boxes. People think all you have to do is give the chemist a sample and he will give you a number. But what does it all mean? Dave pointed out in his presentation that we should take the opportunity to help the engineers and people making decisions about projects to interpret the data. I think if that's done, you will have a better feeling about your job. You will know what it's all about. You should never miss an opportunity to remind the people above us and this means everybody - me to my boss, the technician, and everybody. There is no question that the work that you do helps make the decisions and it's the primary basis for decisions for the remediation at hazardous sites. You can't miss an opportunity to pass that word along, because it's only when we do that, that we energize the people above us. Now, we think about motivation as coming from the top down - the Chief comes down and fires up his Generals and it trickles on down. Well, motivation happens the other way around too. If you have a boss who doesn't understand what you are doing, and you go talk to him, you get some questionable things to do. But at the same time it is an educative process. You have to explain things. You have to work with him. It's not an easy thing to do. I'm standing up here preaching about it. It's not an easy thing for me to do. It takes work. It takes time. It takes coordination and it seems like it's the first thing that suffers when you get pressed for time.

So what are some of the things that we can do to make our jobs better? Take opportunities to describe problems that we run into. Explain why quality assurance (QA) is important for projects. We may spend additional money to go back and look at a site if we don't have QA in place in the beginning. Some of you have come to me and asked how to go about getting additional funds for sampling and analysis at a site. After all I've said, I'm not going to stand up and tell you "Well, you missed it the first time - that's it!" We can't work that way. You have to get your project manager to write us a letter explaining why additional funds are needed and we'll see what we can do to provide the funds. I don't want people to look at this as an invitation not to make the contractor responsible whenever possible. Remember, we're not just talking about a laboratory and making them toe the line. We also have an A/E firm that is concerned about its reputation. They are the people who subcontracted that work and we should approach them too about making things right. They have an image or a reputation to protect.

We talked also about the work plan as a tool. Project managers use it. Chemists in the laboratories can do the very same thing. They can use it as a tool to make their case for additional personnel.

MR. COATS: As far as the determination to do an SI or go straight to the RI/FS, who is making the decision on that?

DR. HEITKE: The whole idea of these changes is to move quickly to the inventory phase, to find out what we have on tap. By going through the inventory, we can get a better handle on what has to be done in this program. So with that idea in mind, we have containerized HTW sites, and those determinations will be made by means of a letter signed by the Division Commander to Headquarters. That letter will include referrals for hazardous and toxic waste sites to MRD and for ordnance and explosives to Huntsville.

Anion Analysis by Ion Chromatography

Mr. Mark Koenig
New England Division Laboratory

I'd like to share my experiences in applying ion chromatography to the water quality program at the New England Division (NED). When I first came to the Corps a few years ago, they had a Dionexion chromatograph sitting there in a box. I wasn't real familiar with it, nor was I familiar with the Technicon Autoanalyzer that was on its last legs. But I think we have a pretty good method worked out now for anion analysis.

Dionex furnishes a cookbook of methods. The method for anion analysis is basically the same as the Environmental Protection Agency (EPA) Method 300.0. We follow it pretty much the same. The only thing we do differently, really, is the sample loop. I use a 200-ul sample loop and this gives us better detection limits. I use a guard column and the same separatory column. The eluent is buffered 1.8/1.7 mm sodium carbonate/sodium bicarbonate. It's chemical suppression with conductivity detection. The regenerate is a 25-millinormal sulfuric acid solution. You get a water dip at the beginning of the spectrum using a 200-ul sample. After that the fluoride, chloride, nitrite, bromide, nitrate, orthophosphate, sulfate, and oxalate elute. The system has an autosampler on it - you load the sample onto the 200-ul loop and pneumatically switch it into the ion eluent flow. The software package has microsoft windows. Dionex has their own software conversion. We have the auto-ion 400 version. It's all computer controlled with an IBM personal computer. All you have to do is load the method and it starts right up, does all the valve switching and everything.

We normally use an 8- or 9-min run for all of these anions. We use a standard mixture that we make up from the salts for calibration - sodium chloride, sodium nitrite, sodium nitrate, monobasic phosphate, sodium sulfate. We make up concentrated standards and then do serial dilutions. Then everything is all in one standard. These standards made from salts are very stable. We use a five-level calibration, including the blank. I tailored the calibration standards to the samples that we normally see. We tend to see more chlorides and sulfates at higher levels. The system is pretty linear and has a very stable conductivity.

At NED, we are somewhat unique among the Division labs. We have our own sampling crew that does our water quality in-house. Therefore we can meet the 48-hr holding times specified by Method 300 for nitrate, nitrite, and ortho-phosphate without acid preservation. Our crew transports the samples to us in iced-down coolers and we run the samples immediately. It takes a lot of communication and planning between the sampling crew and the chemists to meet these holding times. I think it's a lot easier for us since we work with them day in and day out and can be flexible with our schedules to meet holding times. We also have to meet the holding times for the bacteria samples so it's not just the nutrient program that we are concerned about.

Sample preparation is really easy. It's one of the best things about the procedure. Samples are filtered through a 0.45-m filter right into the 5-ml auto-sampler vials. We

use a B & D disposable syringe. This way you don't have to worry about contamination problems. No other sample preparation is needed. I guess this setup has pros and cons just like any other method would. From our experience the Dionex system has a very good uptime and service response. As long as you practice good chromatography techniques, you won't have too many problems. Occasionally there is a problem with a pump seal or something of that nature.

Conductivity is very consistent and stable over time. You can usually run a calibration check a week after running samples and the instrument will still be in calibration. I still run calibration curves every time I run a set of samples.

We participate in EPA's performance sample program for water quality samples. We recently completed performance sample No. 23 for chloride, fluoride, sulfate, nitrate, and orthophosphate. They are all pretty close to the true values. I even reported fluoride, although it's not approved by Method 300. All the values were well within acceptable range. That's a lot of data for an 8-min run.

Most of our NED sites are fairly clean surface water and groundwater, so they won't dirty up the system, and the columns last quite well. We use a guard column on the instrument with a separator of polystyrene-divinylbenzene.

The detection limits for the ion chromatograph are not quite as good as with the colorimetric methods - the nitrate/nitrite, orthophosphate especially. The practical quantitation limits are 10 ppb for nitrate/nitrite and maybe 20 to 30 ppb for orthophosphate. Fluoride is not approved for Method 300 because several organic acids elute right about the same time and you need a significant amount to see it. In New England we do have naturally occurring fluoride and we can usually distinguish it in the chromatogram. Dionex sells this on-guard cartridge to remove tannins, lignins, and things like that. I try not to use those because they take an extra 5-10 min to set up and time is critical.

I also attempted ammonia analysis by ion chromatography and had quite a few problems with it. I don't believe it's an approved EPA method yet and I guess I can understand why. Detection limits weren't low enough. It elutes as a shoulder peak on sodium. I tried weakening the eluent to spread the spectrum out to try to get better resolution, but when I did, it spread the shoulder peak out to nothing. Our sample had 11 ppm sodium which isn't very much - in a lot of cases there's 30 to 50 ppm, so you just won't see ammonia under those conditions.

QUESTION: Has someone tried selective chelation?

MR. KOENIG: There is another method where they do a post-column derivitization and fluorescence detection. It's pretty specific and gives better sensitivity, but we would have had to buy another detector and post-column derivitization setup, and the system is not very stable. You would get just the single peak with that setup. It would be rather difficult for us to meet holding times with only one instrument.

Some divalent cations such as calcium and magnesium would get hung up on the column using the ammonia method because the eluent isn't strong enough to remove

them. You would have to flush the column with a strong eluent and then increase your background conductivity. That would cause a lot of problems. The water in New England is quite high in calcium and magnesium. There is a new column that has just come out that I haven't had a chance to try yet, the CS-10, that is much more efficient with high concentrations of sodium and low concentrations of ammonia. I still don't think you'd get near the detection limits that you would see by a colorimetric method.

Because of the problems with running ammonia by ion chromatography, we have gone to the ion-specific electrode method. This seems to work much better. It's a gas-sensing electrode.

We applied this technique to a biological study at a lake in Connecticut. What they did was use a close-interval sampler that someone in the Corps developed. It consists of a manifold with a syringe every 8 in. and they pressurize it, sink it down into the water and take samples at 22 to 26 ft. Then they evacuate it and pull samples into the syringes. At the bottom we found a higher concentration of ammonia because it's more anaerobic where more decay is taking place. Coming up from the bottom the ammonia would probably oxidize the nitrate. So for the nitrate analysis by ionchromatography we saw just the opposite. The nitrate concentrations were lower at the bottom and increased as you got closer to the surface.

QUESTION: Would you have a problem from the autosampler with the metals contaminating the cation column?

MR. KOENIG: The metals would be hung up on the column too, that's the reason we no longer do cations by ion-chromatography.

QUESTION: How long do the columns last?

MR. KOENIG: I go through one set of columns a year. I'm surprised they don't last longer.

COMMENT: The new columns that Dionex came out with about a year and one half ago seem to work much better.

The USEPA Compendiumon Air Sampling Methods

Mr. Jim Cheney
Missouri River Division, Chemical Review

Yesterday during our introductions, I mentioned that my background was in air sampling and I used that term because in the short time I've been with the Corps, I've found that they use that term to identify sampling just about anything above the ground that has gas in it. I looked at some of the work plans that had air sampling plans or air monitoring plans. They were for sampling the emissions from an air stripper or carbon absorption unit during the trial burn of an incineration project, even a venting system from a capped landfill. I'd like to think of that as a stationary source emission monitoring plan and not an air monitoring plan. If I were going to do that, I'd probably use methods from the Environmental Protection Agency's (EPA's) compliance test methods designed for regulatory purposes or continuous emission monitoring.

In sharp contrast to that, the second type of monitoring that we see going on around hazardous and toxic wastes (HTW) sites would be that in association with health and safety. I like to think of that type of sampling as being performed by non-chemists, and those non-chemists use NIOSH methods.

Then there is a third category of what I would call air sampling in the true sense of the word. It is performed from the fence line or the perimeter out at an HTW site. I would call that ambient air monitoring. In ambient air monitoring, you would find two types of methodology. One would be those well-established ones that help regulate the criteria pollutants and then a second route that has been used for research purposes and are not fully validated. In that classification would be the EPA Compendium methods. If you hear the terminology around a site where they say they are going to use the Compendium Methods, they are usually referring to the five methods in the following:

> "Compendium of Methods for the Determination of Toxic Organic Compounds in Ambient Air," EPA - 600/4-84-041, US Environmental Protection Agency, April, 1984.

This compendium contained the methods and applications given in Table 1. The PUF in method TO-4 refers to polyurethane foam and is a good collector of some semi-volatile compounds, particularly the pesticides and polychlorinated biphenyls (PCBs). Method TO-5 is strictly a research method and was designed to measure aldehydes and ketones, but I can tell you from experience that if you are in an area of low relative humidity, very soon you will have nothing left in your impinger. So, even in an ice bath, this method presents problems.

QUESTION: Is TO-2 a thermal desorption procedure?

MR. CHENEY: To the best of my knowledge, it is thermal desorption.

About 3 years after the initial compendium of methods, a supplement came out:

"Supplement to EPA-600/4-87-006" September 1986.

This supplement contained four methods, TO-6 through TO-9, for specific organic compounds. TO-6 is an impinger method for phosgene, TO-7 is a resin method for N-Nitrosodimethylamine, TO-8 is an impinger method for cresol and phenol, and TO-9 is a high-volume PUF method for dioxin.

Then we had a second supplement to the compendium:

"Second Supplement to Compendium of Methods for the Determination of Toxic Organic Compounds in Ambient Air," EPA 600-4-89-018, June 1988.

The methods and applications in this supplement are given in Table 2.

The last compendium in this series is:

"Compendium of Methods for the Determination of Air Pollutants in Indoor Air," Draft, September 1989.

So be sure when you request your compendium of air methods that you specify indoor or outdoor air.

An effort is currently under way by EPA to develop methodology for sampling around Superfund sites. The work is being directed out of the Office of Emergency and Remedial Response (OERR). Emile Boulos who is sitting in the back of the room and is currently on detail with us from EPA was the Project Manager on this effort. There are two separate efforts. The first is the sampling methods themselves: writing out detailed procedures and specifications for how the sampling is to be done. The second is the current effort dealing with the analytical procedures that will be used to detect what's collected. The second effort will be done at EPA Research Triangle Park through contract. These procedures, listed in Table 3, are currently undergoing validation. Eight to ten laboratories will be selected to participate in this validation process.

The purpose of this validation process is to establish (1) the precision and accuracy (bias) that can be expected under routine use by a qualified, experienced laboratory; (2) the clarity and applicability of the draft analytical method; (3) significant sources of error so that appropriate quality control (QC) procedures can be included in the final draft of the method; and (4) target qualifying goals for OERR to use when selecting laboratories for the Contact Laboratory Program.

Figure 1 is a high volume sampler used for collecting a number of these samples. "High volume" refers to the volume of air pulled through the sampler. Figure 2 is a detailed view of the sampler head itself. These samplers are rugged and have been in use for 25 to 30 years.

Air sampling is one phase of the analytical process that has been largely neglected by the Corps in the past, but with the adoption of these methods for use at HTW sites, I see the requirements and regulations increasing.

Table 1
Methods and Applications for Ambient Air Monitoring, EPA 600/4-84-041

Method Number	Description	Types of Compounds Determined
TO-1	Tenax GC adsorption and GC/MS analysis	Volatile, nonpolar organics (e.g., aromatic hydrocarbons, chlorinated hydrocarbons) having boiling points in the range of 80° to 200° C
TO-2	Carbon molecular sieve adsorption and GC/MS	Highly volatile, nonpolar organics (e.g., vinyl chloride, vinylidene chloride, benzene, toluene) having boiling points in the range of -15° to +120° C
TO-3	Cryogenic trapping and GC/FID or ECD analysis	Volatile, nonpolar organics having boiling points in the range of -10° to +200° C
TO-4	High-volume PUF sampling and GC/ECD analysis	Organochlorine pesticides PCBs
TO-5	Dinitrophenylhydrazine liquid impinger sampling and HPLC/UV analysis	Aldehydes and ketones

Table 2
Methods and Applications for Ambient Air Monitoring, Supplement to EPA 600/4-87-006

Method Number	Description	Types of Compounds Determined
TO-10	Low-volume polyurethane foam (PUF) sampling with gas chromatography/electron capture detector (GC/ECD)	Pesticides
TO-11	Adsorbent cartridge followed by high performance liquid chromatography (HPLC) detection	Formaldehyde
TO-12	Cryogenic preconcentration and direct flame ionization detection (PDFID)	Non-methane organic compounds (NMOC)
TO-13	PUF/XAD-2 adsorption with gas chromatography (GC) and high performance liquid chromatography (HPLC) detection	Polynuclear aromatic hydrocarbons (PAHs)
TO-14	SUMMA passivated canister sampling with gas chromatography	Semi-volatile and volatile organic compounds (SVOC/VOCs)

Table 3
Analytical Methods

Part 1 Volatiles	
Method 1.1	SUMMA canister followed by GC/MS
Method 1.2	Tenax adsorbent tube followed by GC/MS
Part 2 Semi-volatiles	
Method 2.1	Filter/PUF/XAD-2 followed by GC/MS
Part 3 Pesticides and PCBs	
Method 3.1	Filter/PUF/XAD-2 followed by GC/MS
Method 3.2	Filter/PUF/XAD-2 followed by HRGC/HRMS
Part 4 Metals	
Method 4.1	Filter followed by ICP
Method 4.2	Filter followed by GFAA

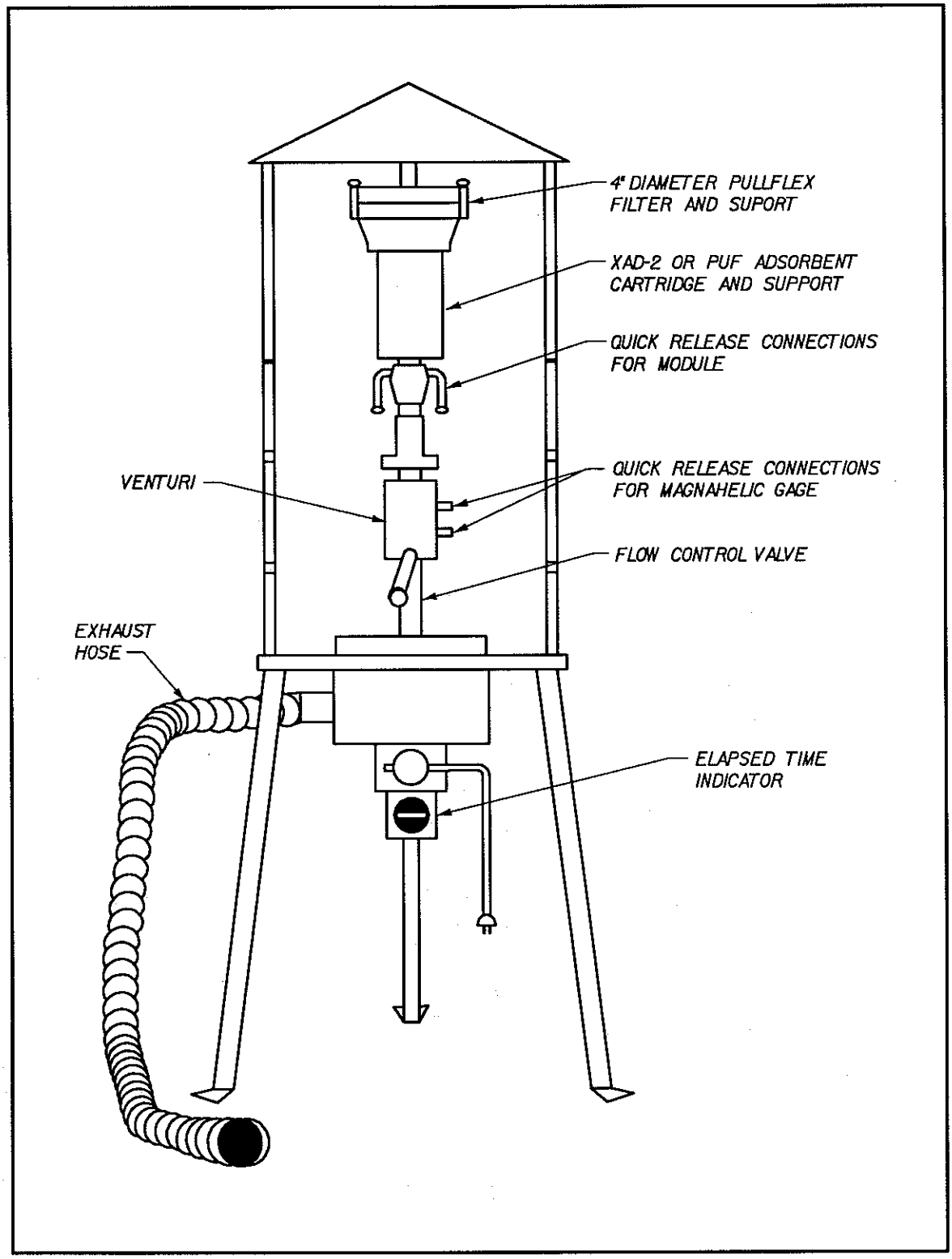

Figure 1. Portable high-volume air sampler

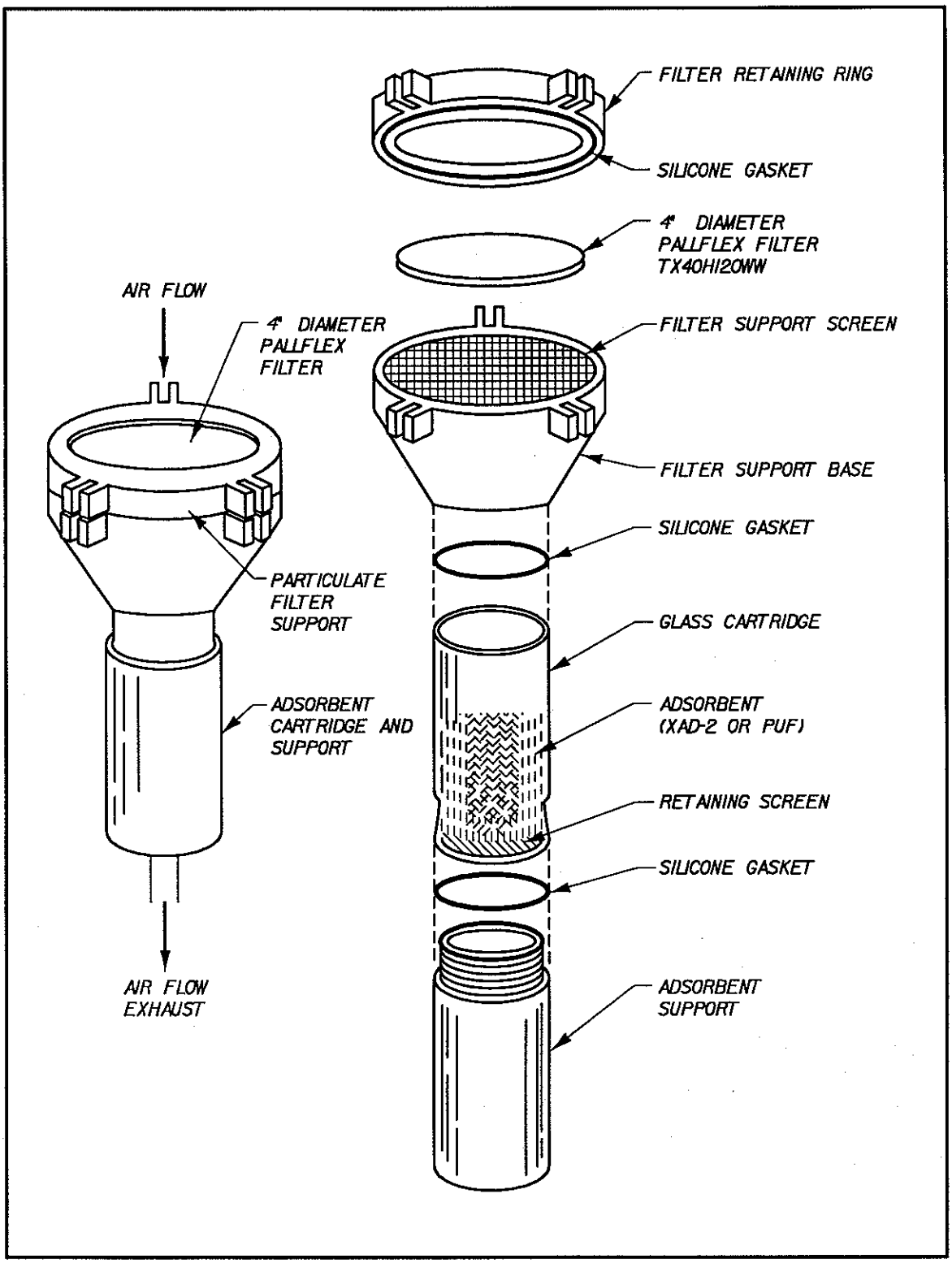

Figure 2. General metal works sampling head